Equilibrium of Rigid Bodies

© 2007 The McGraw-Hill Companies, Inc. All rights reserved.

Introduction

- For a rigid body in static equilibrium, the external forces and moments are balanced and will impart no translational or rotational motion to the body.

- The necessary and sufficient condition for the static equilibrium of a body are that the resultant force and couple from all external forces form a system equivalent to zero,

$$\sum \vec{F} = 0 \quad \sum \vec{M}_O = \sum \left(\vec{r} \times \vec{F} \right) = 0$$

- Resolving each force and moment into its rectangular components leads to 6 scalar equations which also express the conditions for static equilibrium,

$$\sum F_x = 0 \quad \sum F_y = 0 \quad \sum F_z = 0$$
$$\sum M_x = 0 \quad \sum M_y = 0 \quad \sum M_z = 0$$

Free Body Diagram (FBD)

Free Body Diagram is a diagrammatic representation of the isolated system treated as single body.

The diagram show all forces applied to the system by mechanical contact with other bodies, which are imagined to be removed.

If appreciable body forces are present, e.g. gravitational force or magnetic attraction, then these forces are also to be shown on the free body diagram

Only after such a diagram has been carefully drawn should the equilibrium equations be written. Because of its critical importance, we emphasize here that the free-body diagram is the most important single step in the solution of problems in mechanics.

Example

A free-body diagram of the tractor shown would include all of the external forces acting on the tractor: the weight of the tractor, the weight of the load in the bucket, and the forces exerted by the ground on the tires.

Free-Body Diagram

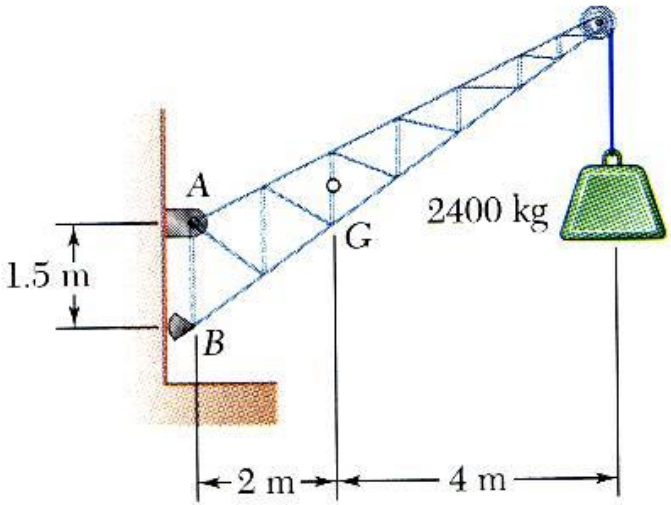

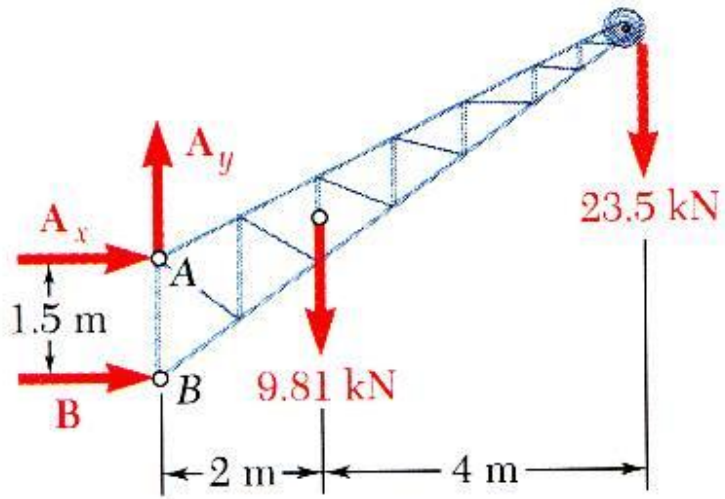

First step in the static equilibrium analysis of a rigid body is identification of all forces acting on the body with a *free-body* diagram.

- Select the extent of the free-body and detach it from the ground and all other bodies.
- Indicate point of application, magnitude, and direction of external forces, including the rigid body weight.
- Indicate point of application and assumed direction of unknown applied forces. These usually consist of reactions through which the ground and other bodies oppose the possible motion of the rigid body.
- Include the dimensions necessary to compute the moments of the forces.

When indicating the direction of known external forces, it must be remembered that the forces shown on the free body diagram must be those which are exerted on, and not by the free body.

Reactions at Supports and Connections for a Two-Dimensional Structure

Support or Connection	Reaction	Number of Unknowns
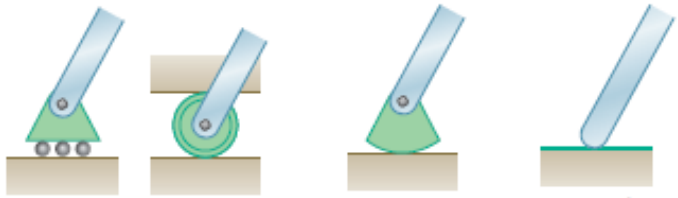 Rollers; Rocker; Frictionless surface	Force with known line of action	1
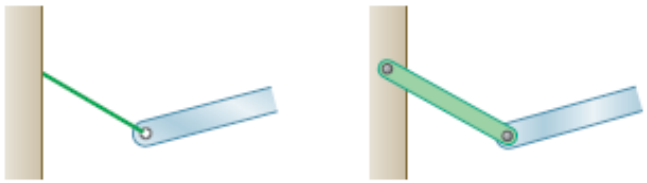 Short cable; Short link	Force with known line of action	1
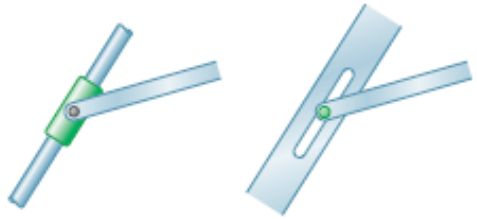 Collar on frictionless rod; Frictionless pin in slot	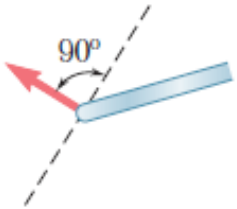 Force with known line of action	1

- Reactions equivalent to a force with known line of action.

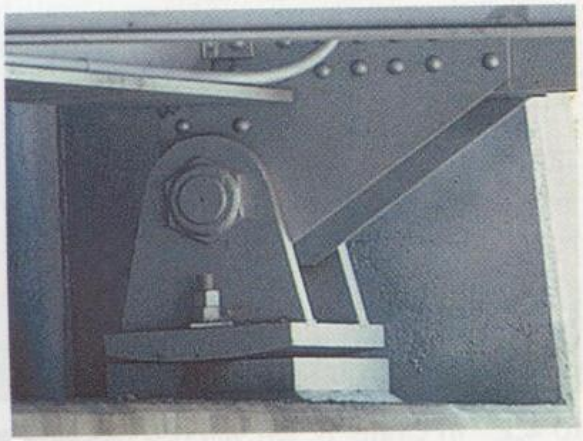

The abutment-mounted rocker bearing shown is used to support the roadway of a bridge.

Reactions at Supports and Connections for a Two-Dimensional Structure

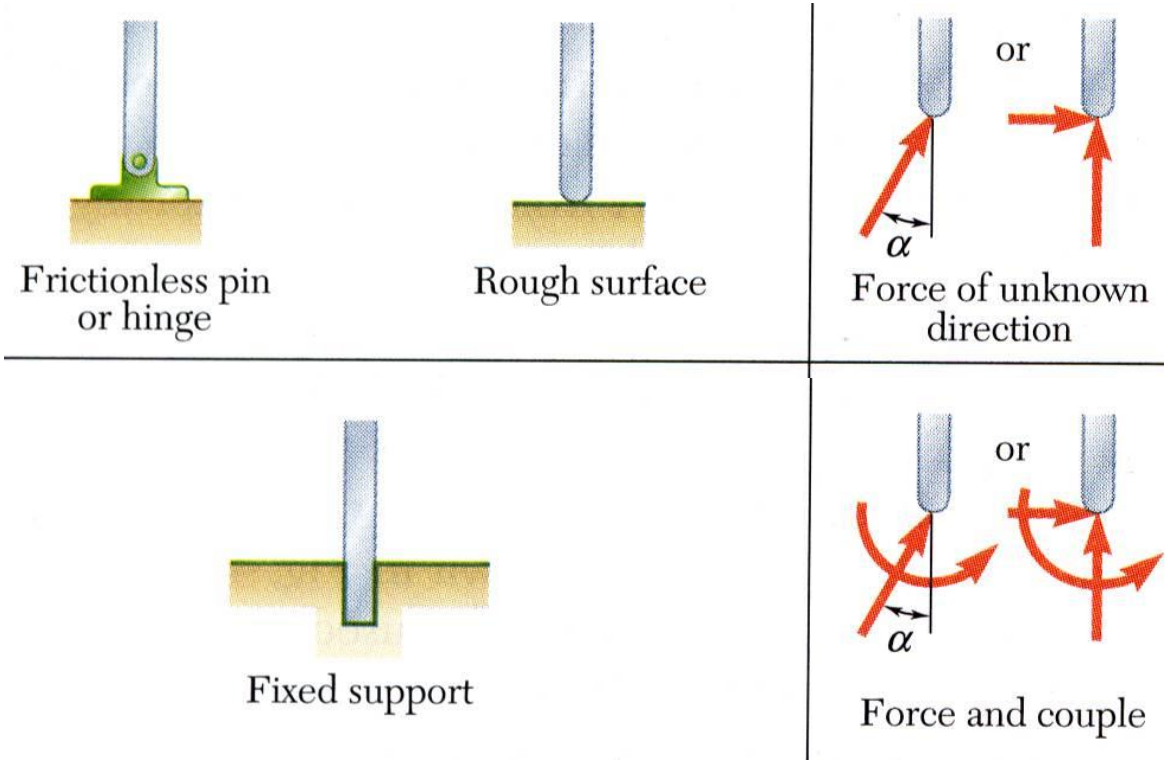

- Reactions equivalent to a force of unknown direction and magnitude.

- Reactions equivalent to a force of unknown direction and magnitude and a couple.of unknown magnitude

Sample FBDs

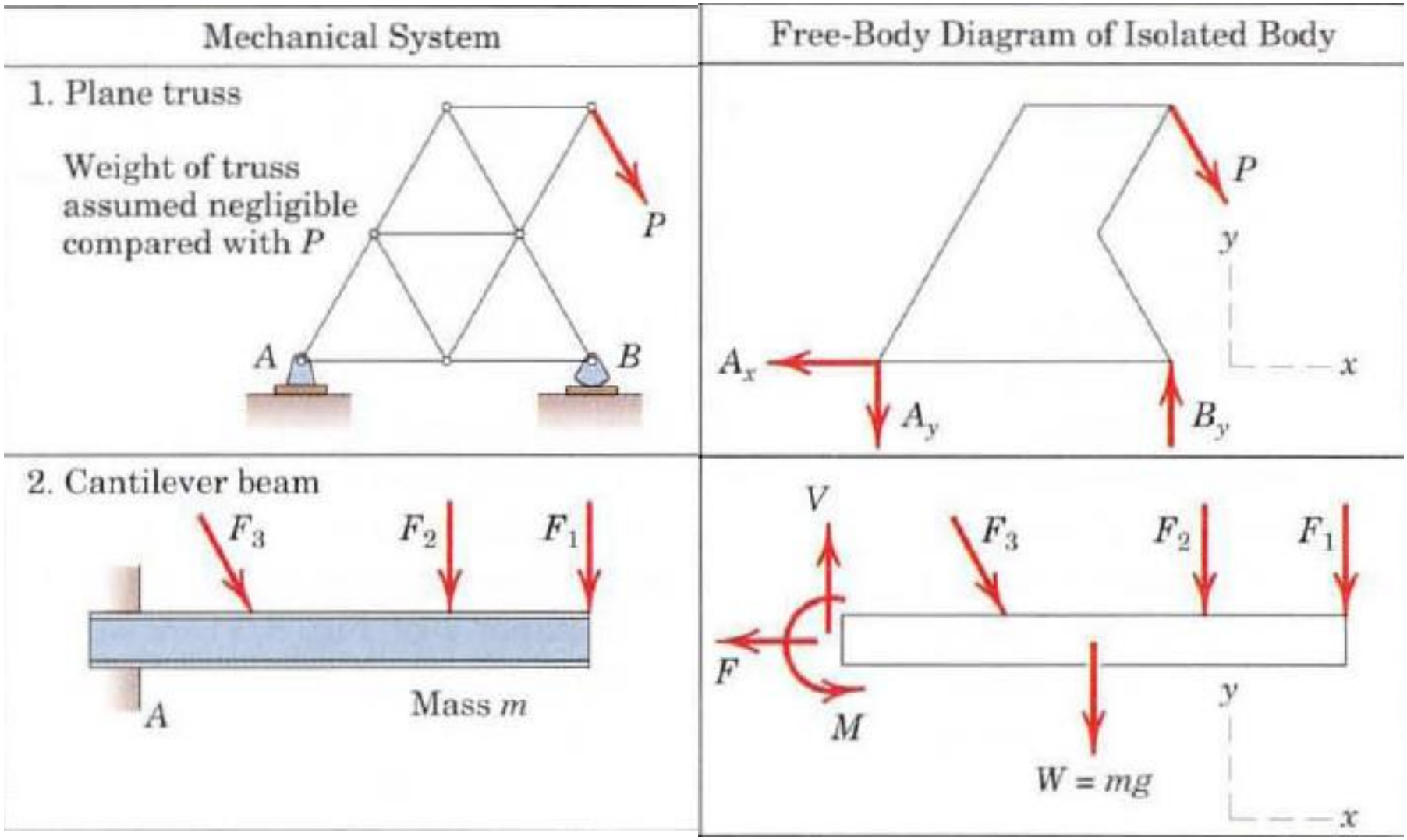
Mechanical System
Free-Body Diagram of Isolated Body
1. Plane truss
Weight of truss assumed negligible compared with P
P
A
B
P
y
x
A_x
A_y
B_y
2. Cantilever beam
F_3
F_2
F_1
A
Mass m
V
F_3
F_2
F_1
F
M
y
W = mg
x

Sample FBDs

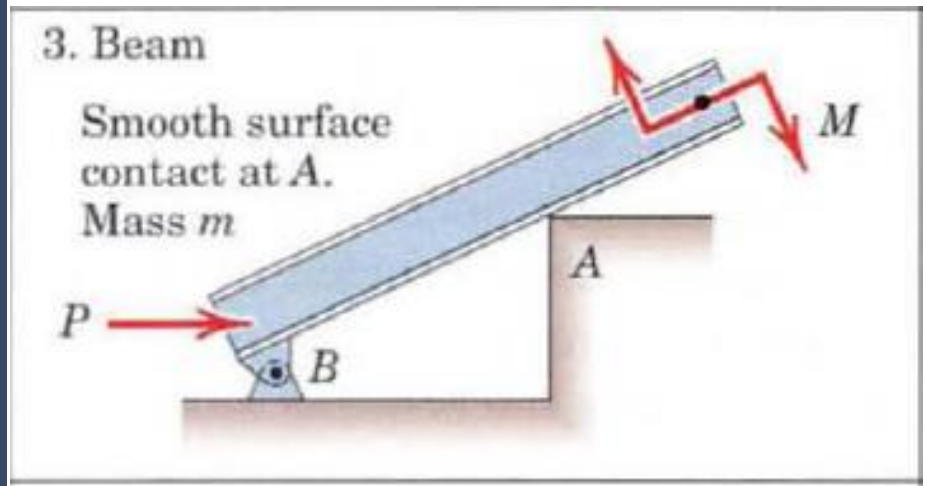
3. Beam
Smooth surface contact at A.
Mass m
M
A
P
B

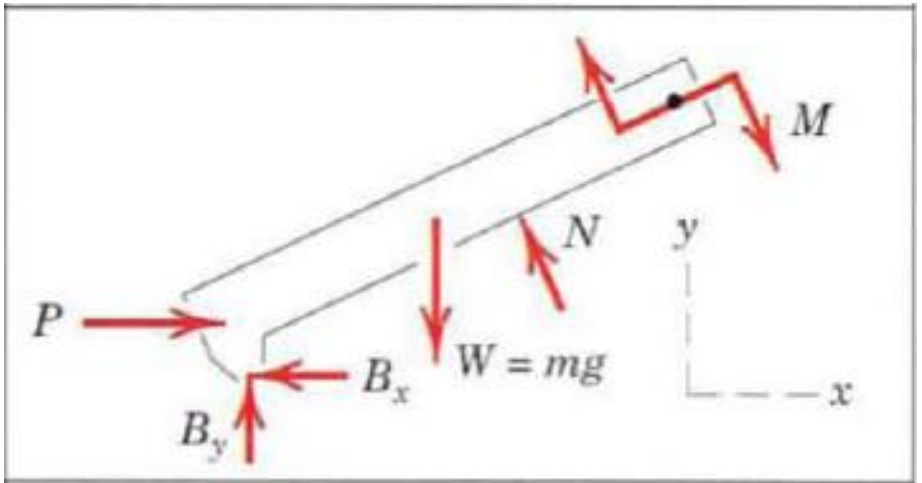
M
N
y
P
W = mg
B_x
x
B_y

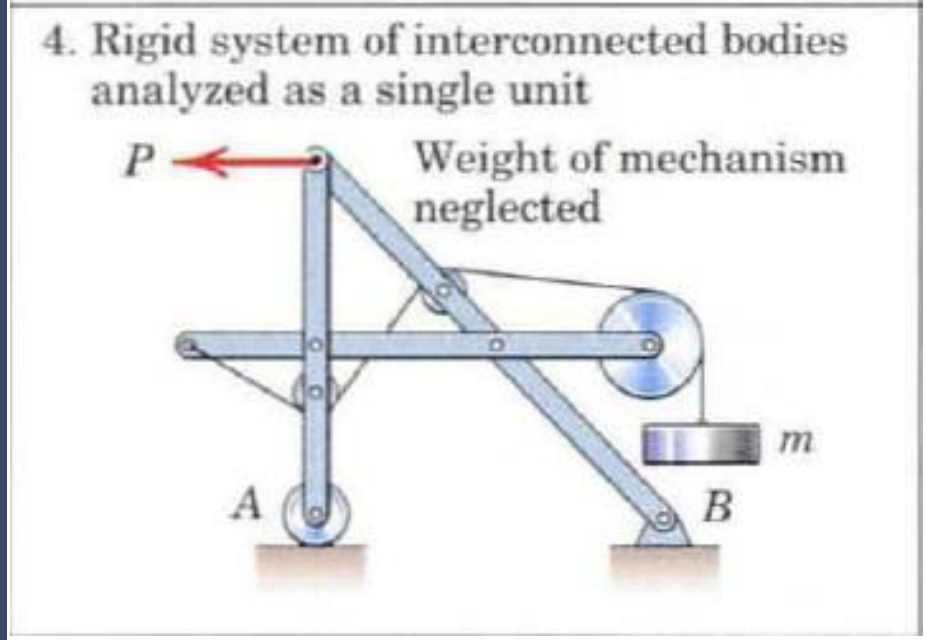
4. Rigid system of interconnected bodies analyzed as a single unit
P
Weight of mechanism neglected
m
A
B

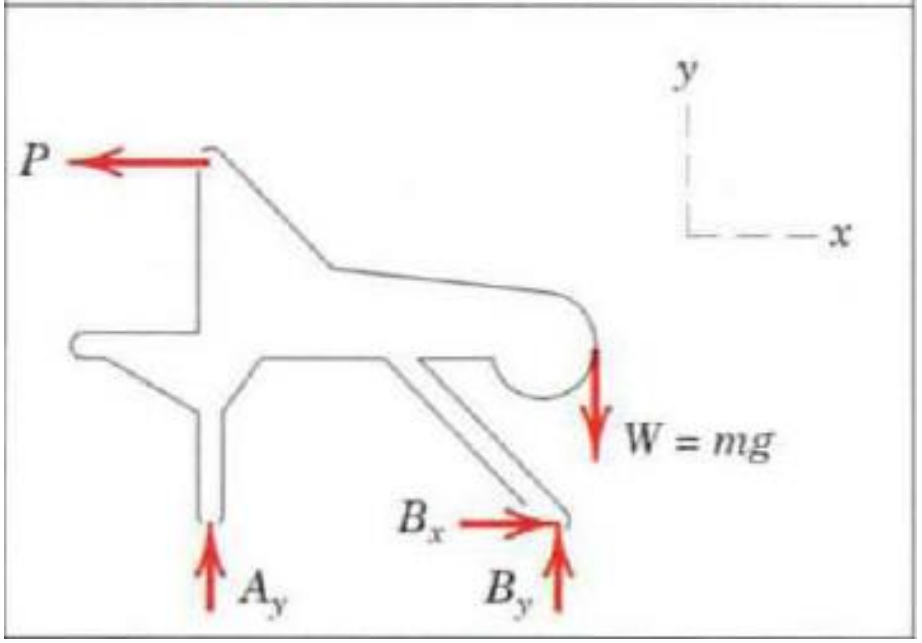
y
P
x
W = mg
B_x
A_y
B_y

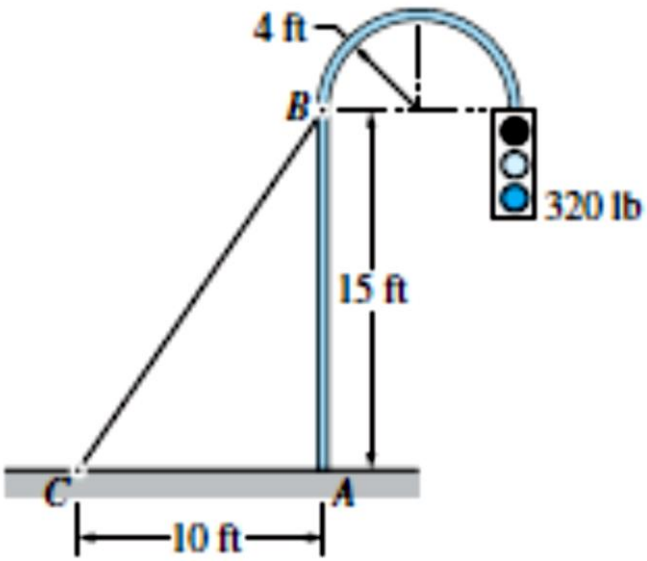
4 ft
B
320 lb
15 ft
C
A
10 ft

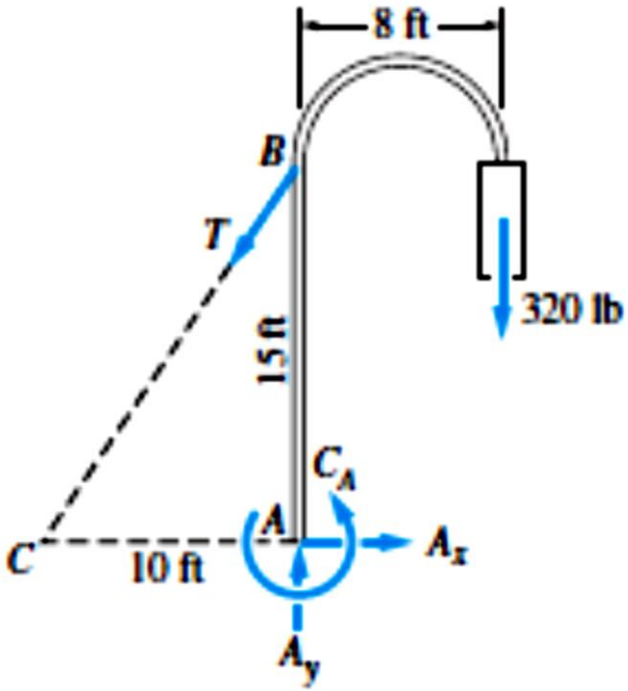
8 ft
B
T
320 lb
15 ft
C_A
A
A_x
C
10 ft
A_y

CATEGORIES OF EQUILIBRIUM IN TWO DIMENSIONS		
Force System	Free-Body Diagram	Independent Equations
1. Collinear	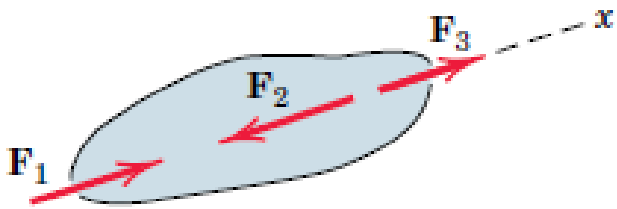	$\Sigma F_x = 0$
2. Concurrent at a point	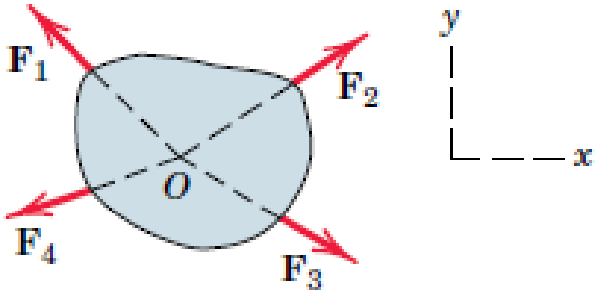	$\Sigma F_x = 0$ $\Sigma F_y = 0$
3. Parallel	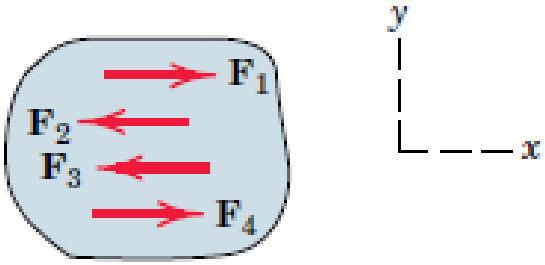	$\Sigma F_x = 0$ $\Sigma M_z = 0$
4. General	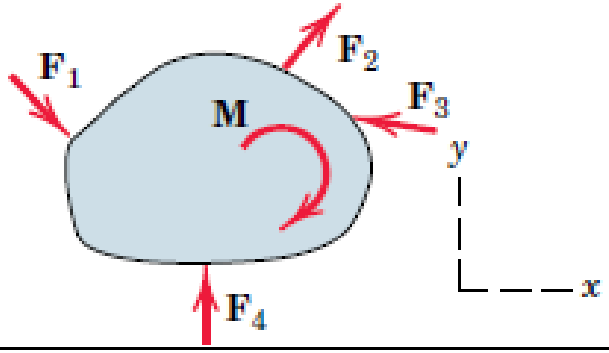	$\Sigma F_x = 0$ $\Sigma M_z = 0$ $\Sigma F_y = 0$

Equilibrium of a Rigid Body in Two Dimensions

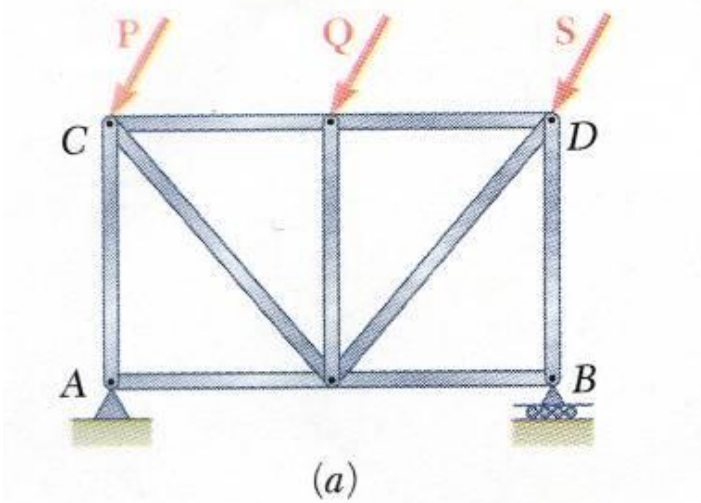

(a)

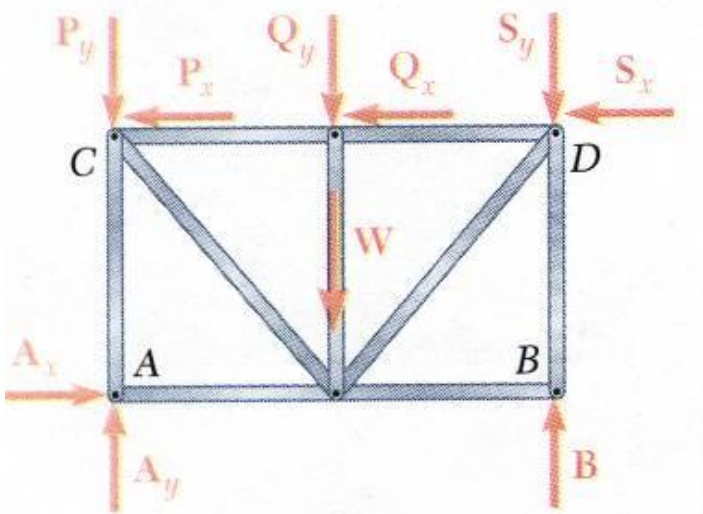

(b)

- For all forces and moments acting on a two-dimensional structure,

$$F_z = 0 \quad M_x = M_y = 0 \quad M_z = M_O$$

- Equations of equilibrium become

$$\sum F_x = 0 \quad \sum F_y = 0 \quad \sum M_A = 0$$

where A is any point in the plane of the structure.

- The 3 equations can be solved for no more than 3 unknowns.

- The 3 equations can not be augmented with additional equations, but they can be replaced

$$\sum F_x = 0 \quad \sum M_A = 0 \quad \sum M_B = 0$$

Statically Indeterminate Reactions

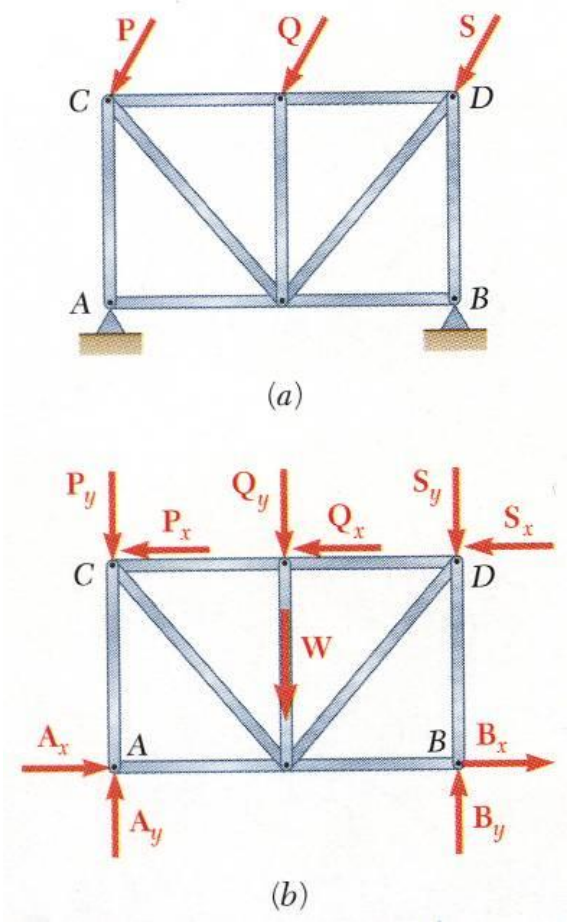

- More unknowns than equations

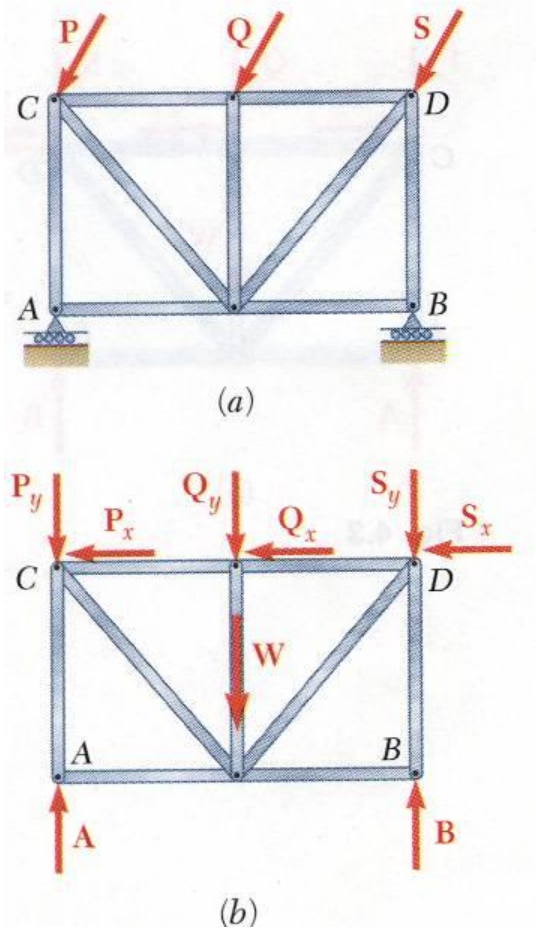

- Fewer unknowns than equations, partially constrained

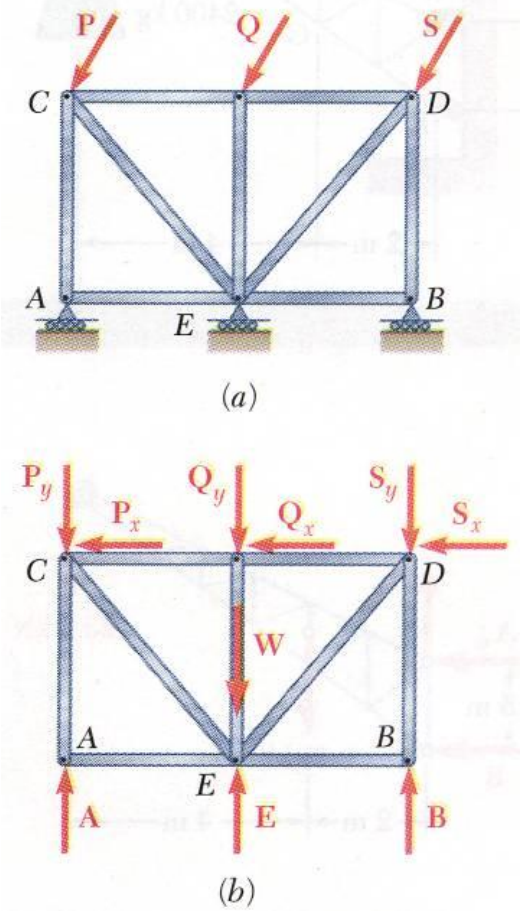

- Equal number unknowns and equations but improperly constrained

Example Problem 1

A carpenter carries a 6-kg uniform board as shown. What downward force does he feel on his shoulder at *A*?

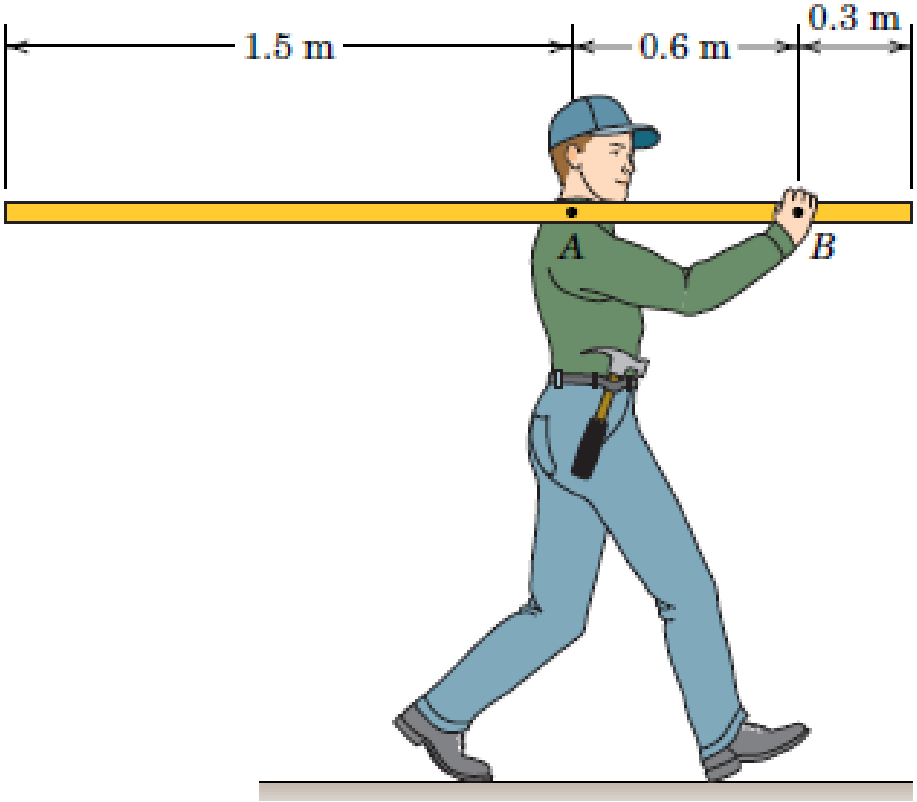

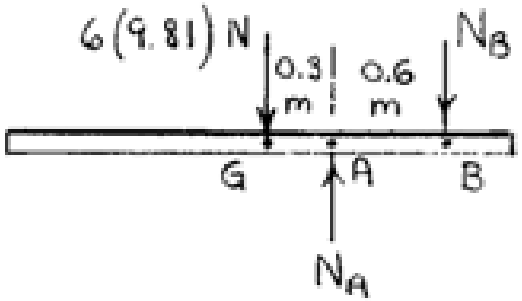

$$\circlearrowleft + \sum M_B = 0: \quad 6(9.81)(0.9) - N_A(0.6) = 0$$

$$\underline{N_A = 88.3 \text{ N}}$$

Example Problem 2

In the side view of a 70-kg television resting on a 24-kg cabinet, the mass centers are labeled G_1 *and* G_2. Determine the force reactions at *A and B. (Note that* the mass center of most televisions is located well forward because of the heavy nature of the front portion of picture tubes.)

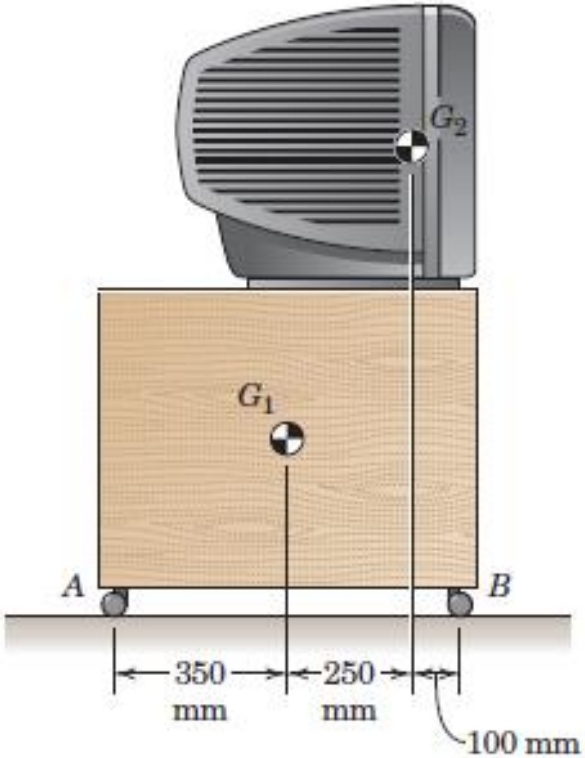

$\circlearrowleft + \sum M_A = 0: \; -24(9.81)350 - 70(9.81)(600) + N_B(700) = 0$

$N_B = 706 \text{ N}$

$+\uparrow \sum F = 0: \; N_A + 706 - (70+24)(9.81) = 0$

$N_A = 216 \text{ N}$

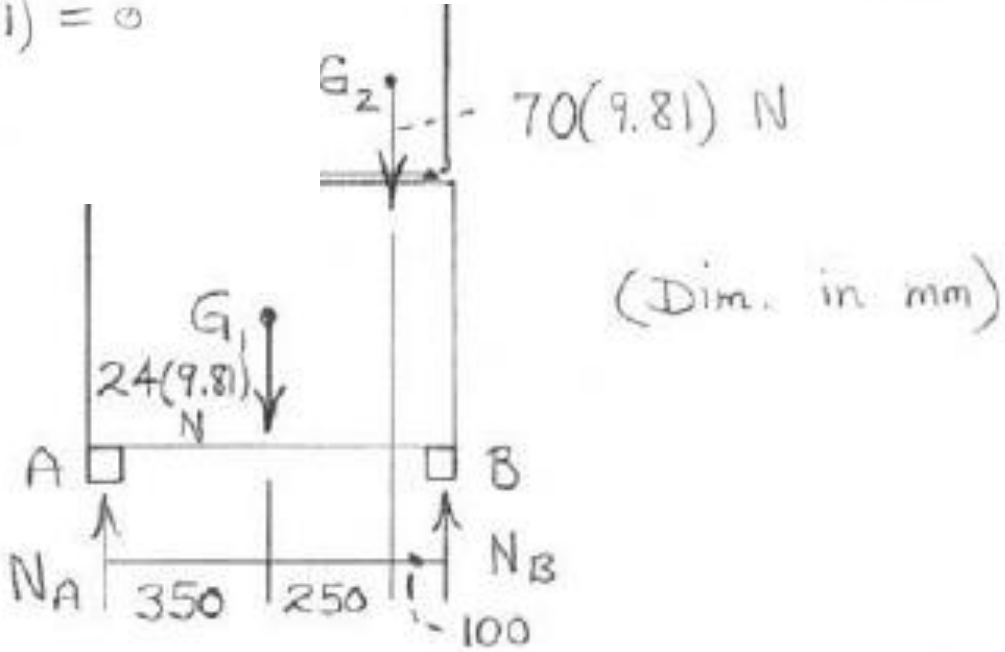

Example Problem 3

The masses of the person and the diving board are 54 kg and 36 kg, respectively. Assume that they are in equilibrium.
(a) Draw the free-body diagram of the diving board.
(b) Determine the reactions at the supports A and B.

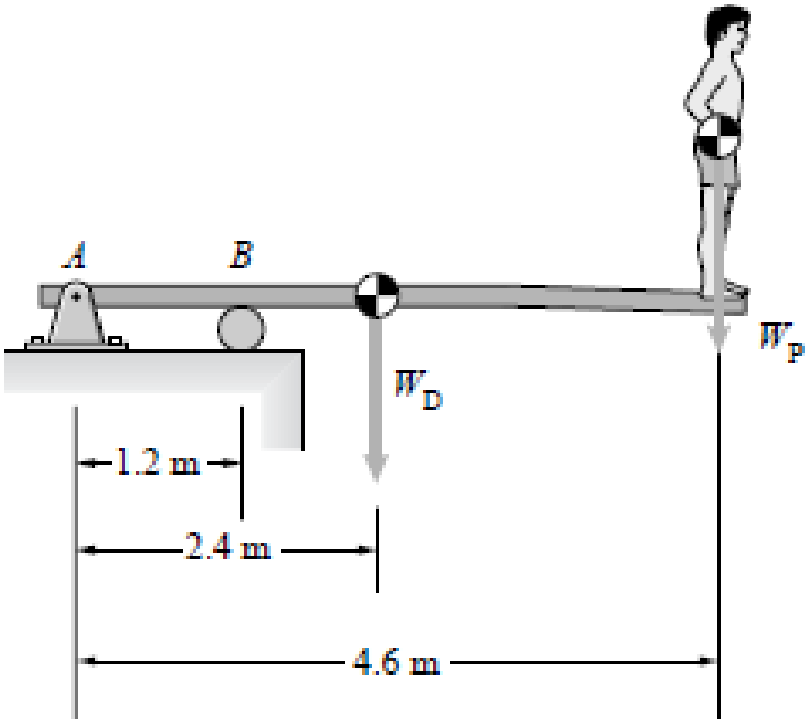

(b) $\sum F_X = 0: \quad A_X = 0$

$\sum F_Y = 0: \quad A_Y + B_Y - (54)(9.81) - 36(9.81) = 0$

$\sum M_A = 0: \quad 1.2B_Y - (2.4)(36)(9.81)$

$- (4.6)(54)(9.81) = 0$

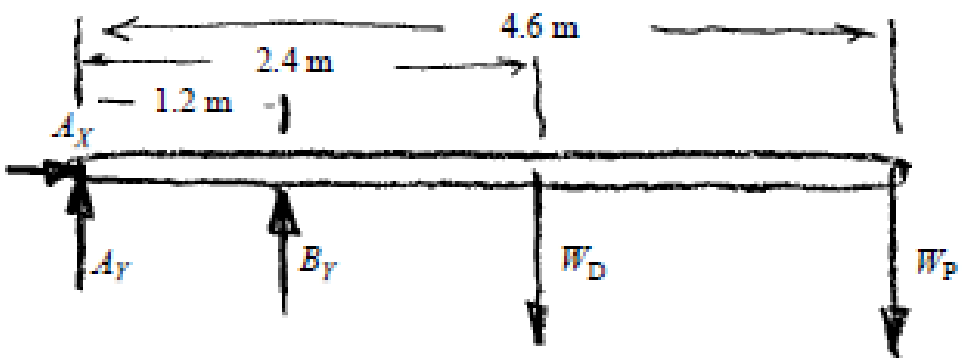

Solving: $A_X = 0$ N

$A_Y = -1.85$ kN

$B_Y = 2.74$ kN

Example Problem 4

The boom on a 19000 N truck is used to unload a pallet of shingles of weight 7000 N, Determine the reaction at each of the two (*a) rear* wheels *B, (b) front wheels C.*

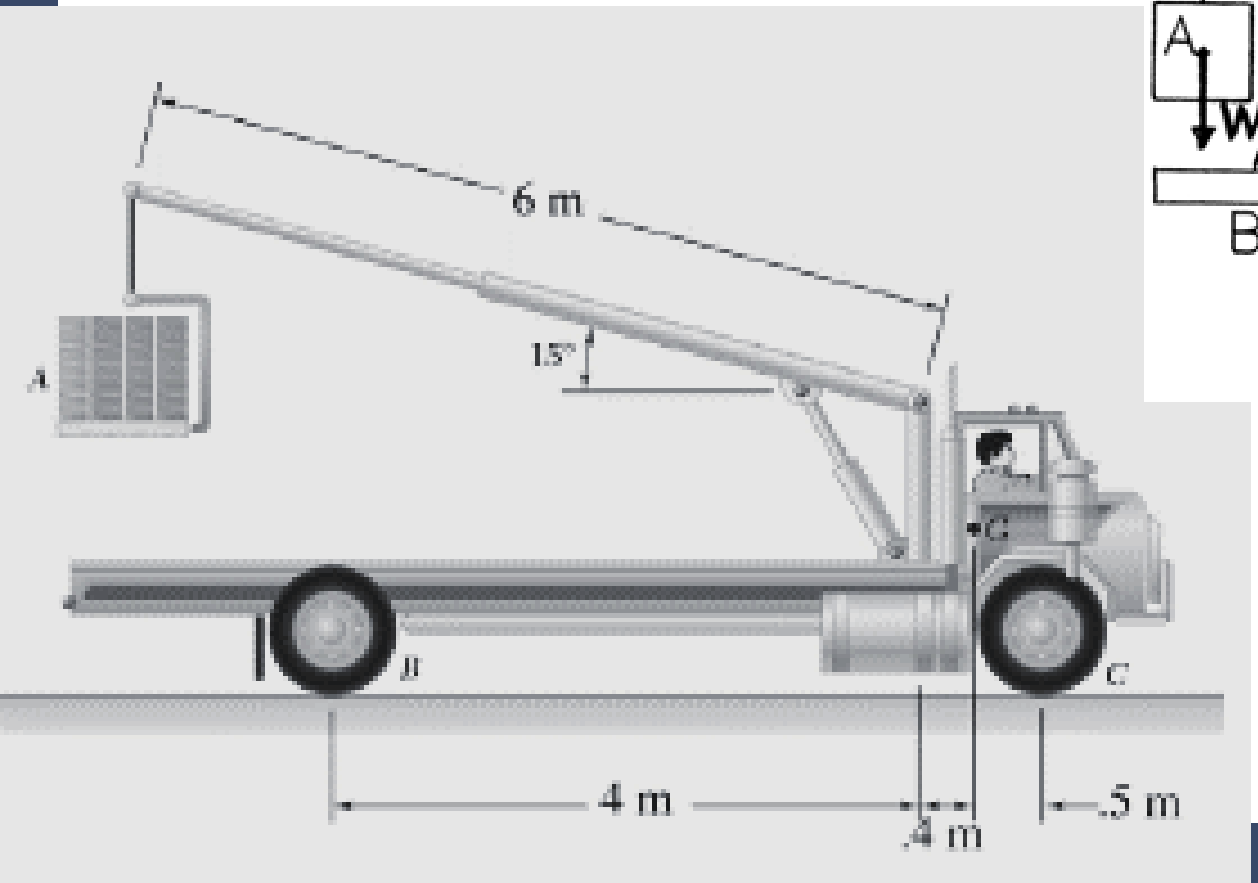

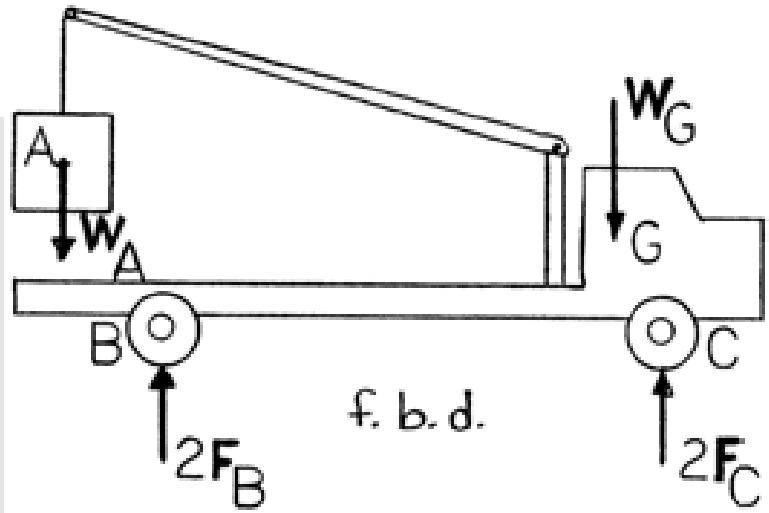

Solution

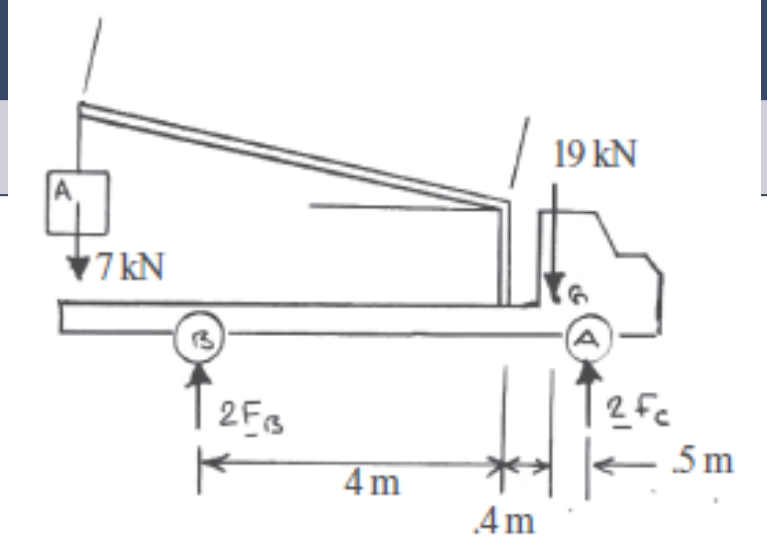

(a)

$$+\circlearrowleft \Sigma M_C = 0: \quad (7\text{ kN})\left[\left(.5 + .4 + 6\cos 15^\circ\right)\text{m}\right] - 2F_B\left[(.5 + .4 + 4)\text{m}\right] + (19\text{ kN})(.5\text{ m}) = 0$$

$$F_B = 5.75\text{ kN}$$

or $\mathbf{F}_B = 5.75\text{ kN} \uparrow$

(b)

$$+\circlearrowleft \Sigma M_B = 0: \quad (7\text{ kN})\left[\left(6\cos 15^\circ - 4\right)\text{m}\right] - (19\text{ kN})\left[(4 + .4)\text{m}\right] + 2F_C\left[(4 + .4 + .5)\text{m}\right] = 0$$

$$F_C = 7.25\text{ kN or}$$

or $\mathbf{F}_C = 7.25\text{ kN} \uparrow$

The exercise machine is designed with a lightweight cart which is mounted on small rollers so that it is free to move along the inclined ramp. Two cables are attached to the cart—one for each hand. If the hands are together so that the cables are parallel and if each cable lies essentially in a vertical plane, determine the force P which each hand must exert on its cable in order to maintain an equilibrium position. The mass of the person is 70 kg, the ramp angle θ is 15°, and the angle β is 18°. In addition, calculate the force R which the ramp exerts on the cart.

Ans. $P = 45.5$ N, $R = 691$ N

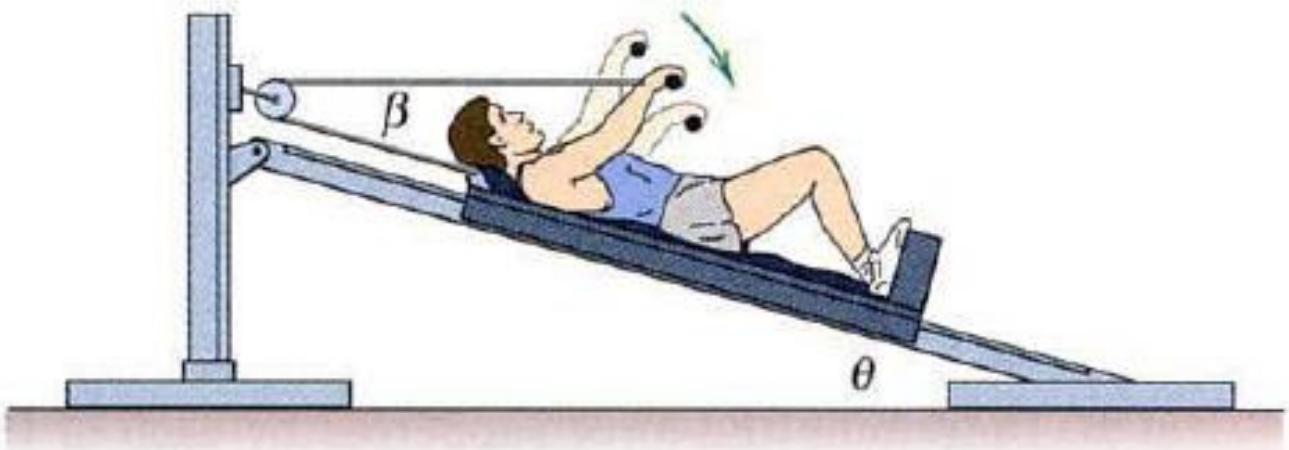

Solution

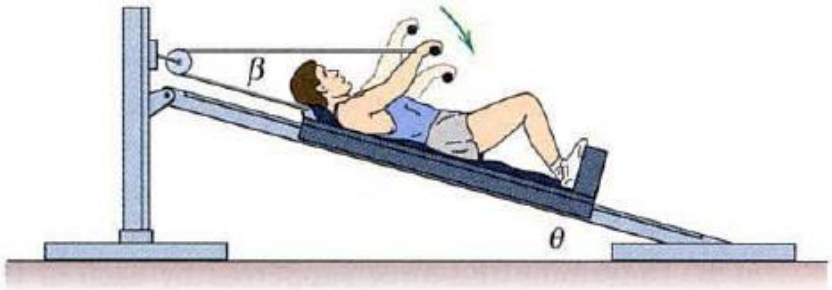

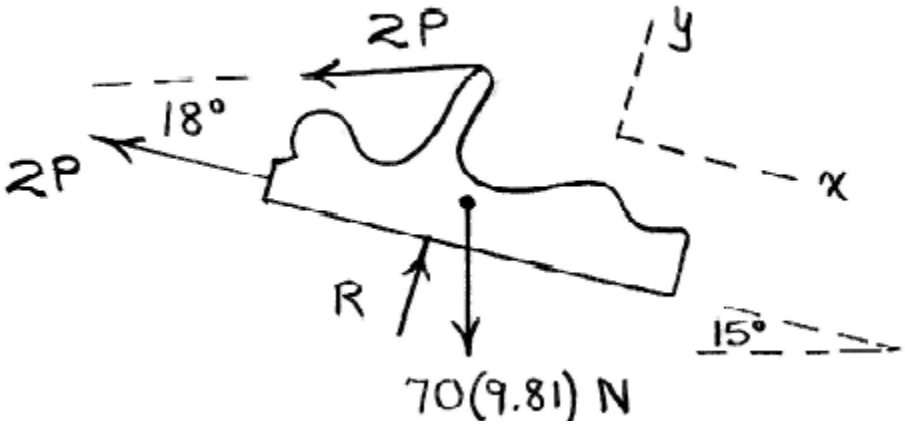

$$\Sigma F_x = 0: \quad 70(9.81)\sin 15° - 2P - 2P\cos 18° = 0$$

$$\underline{P = 45.5 \text{ N}}$$

$$\Sigma F_y = 0: \quad R - 70(9.81)\cos 15° - 2(45.5)\sin 18° = 0$$

$$\underline{R = 691 \text{ N}}$$

To cross a crevasse, three mountain climbers position a 3.5-m-long ladder as shown. Neglecting friction at A and B and knowing that the hiker at A exerts a horizontal force $\mathbf{P}$ on the end of the ladder, determine (*a*) the reactions at A and B, (*b*) the force $\mathbf{P}$.

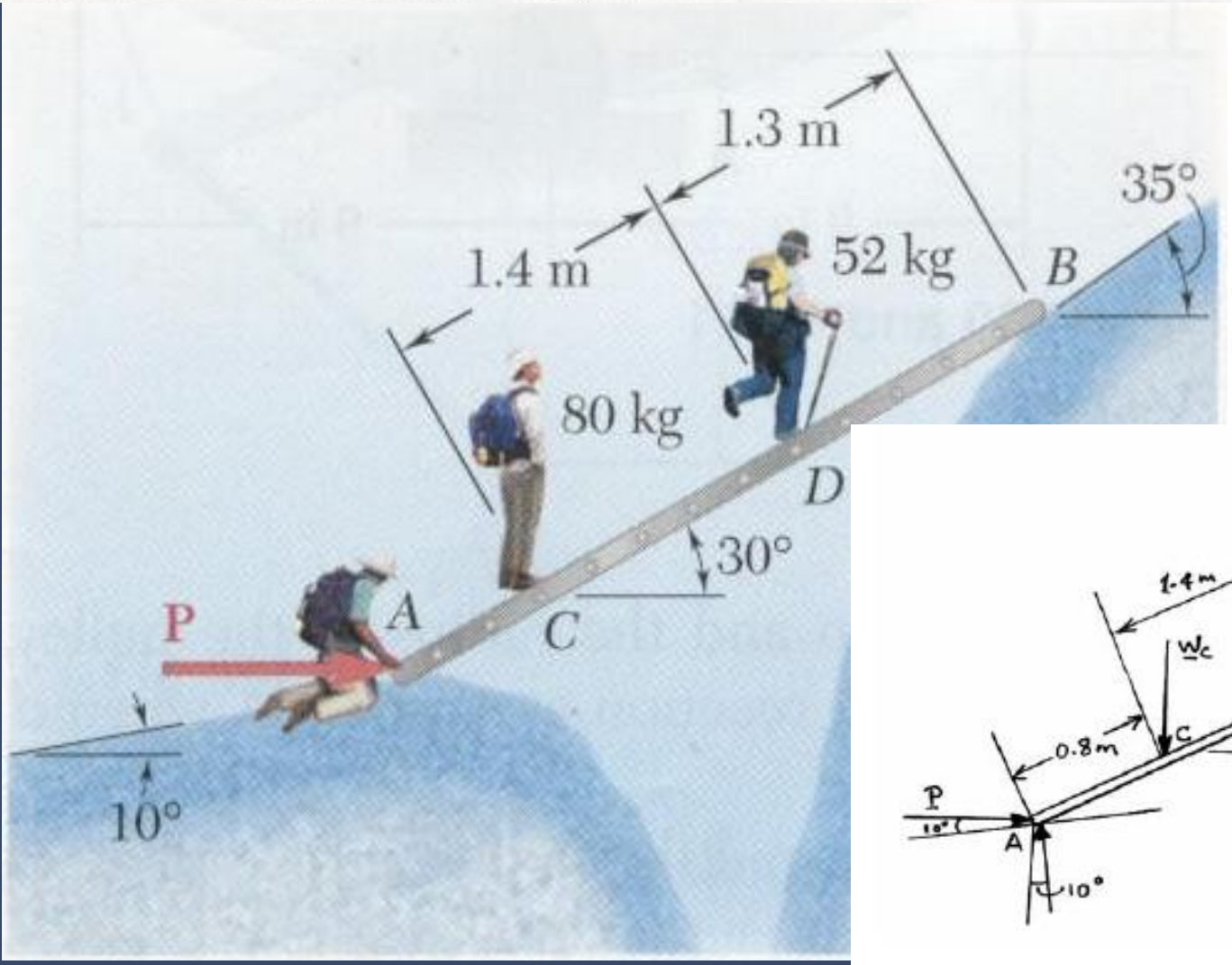

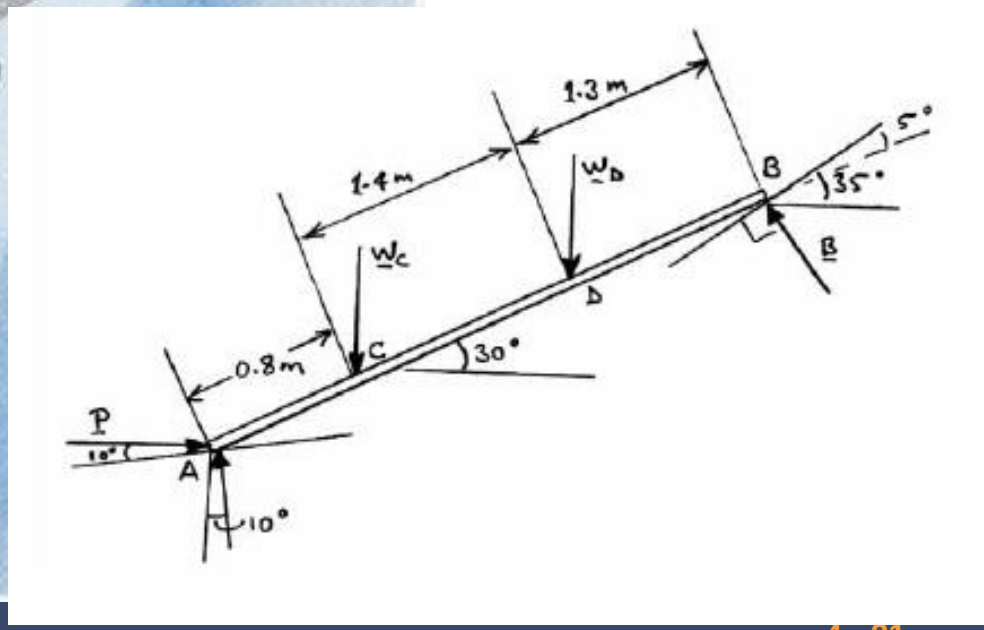

Solution

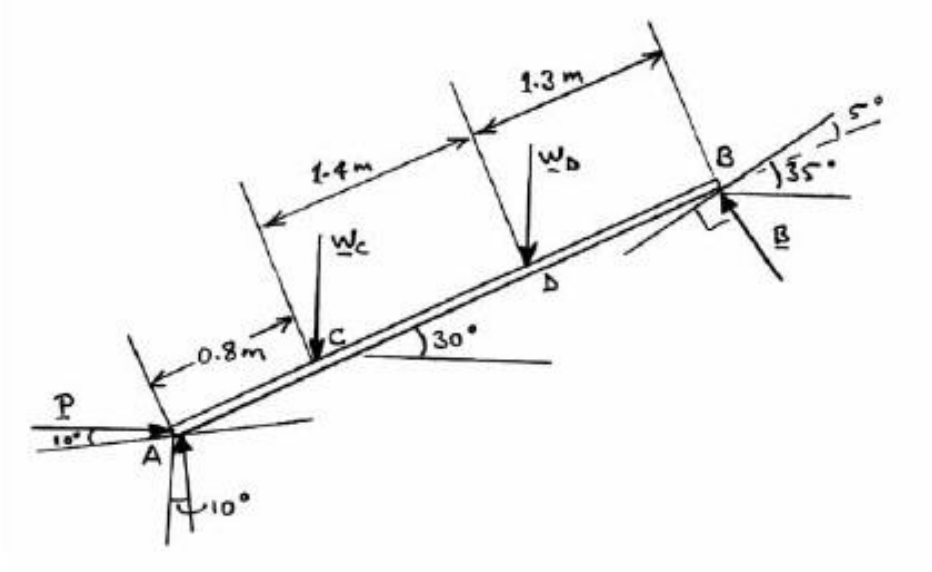

Note that $\mathbf{W}_C = -(80\text{ kg})(9.81\text{ m/s}^2) = 784.80\text{ N}$

$\mathbf{W}_D = -(52\text{ kg})(9.81\text{ m/s}^2) = 510.12\text{ N}$

(*a*)

$+\circlearrowleft\ \Sigma M_A = 0:\quad -(784.80\text{ N})(0.8\text{ m})\cos 30° - (510.12\text{ N})(2.2\text{ m})\cos 30° + B(3.5\text{ m})\cos 5° = 0$

$B = 434.69\text{ N}$ or $\mathbf{B} = 435\text{ N} \measuredangle 55°$

(*b*)

$+\uparrow\ \Sigma F_y = 0:\quad A\cos 10° - 784.80\text{ N} - 510.12\text{ N} + (434.69\text{ N})\cos 35° = 0$

$A = 953.33\text{ N}$ or $\mathbf{A} = 953\text{ N} \measuredangle 80°$

$\xrightarrow{+}\ \Sigma F_x = 0:\quad P - (953.33\text{ N})\sin 10° - (434.69\text{ N})\sin 35° = 0$

$P = 414.87\text{ N}$ or $\mathbf{P} = 415\text{ N} \rightarrow$

Example Problem 7

The car's wheelbase (the distance between the wheels) is 2.82 m. The mass of the car is 1760 kg and its weight acts at the point x =2.00 m, y = 0.68 m. If the angle α= 15°, what is the total normal force exerted on the two rear tires by the sloped ramp?

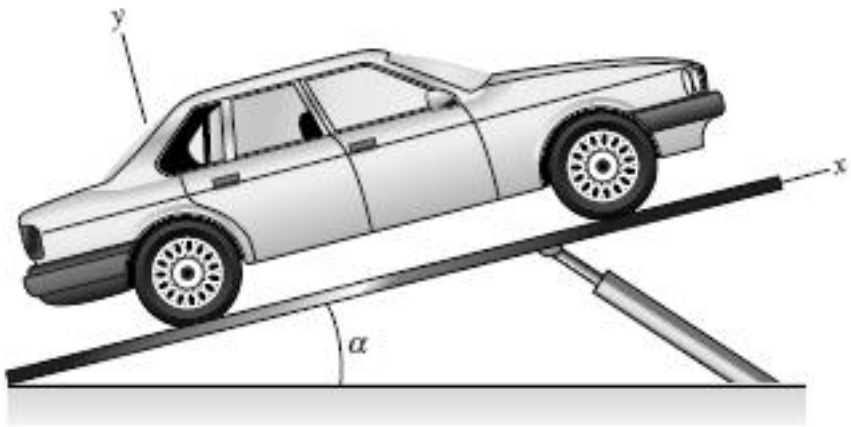

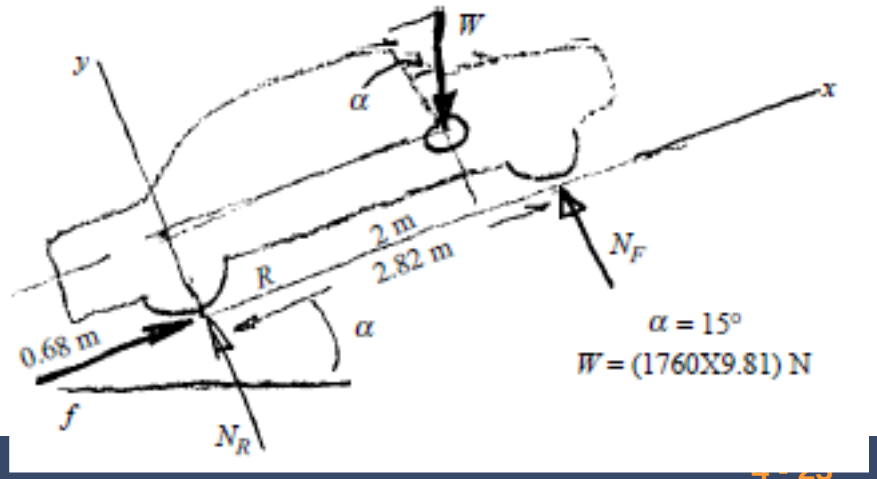

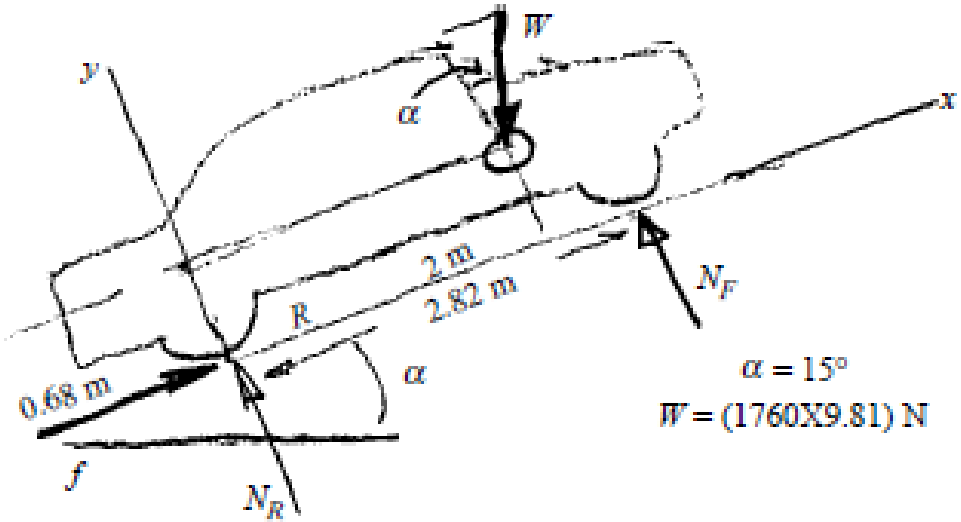

Solution: Split W into components:

$W\cos\alpha$ acts $\perp$ to the incline

$W\sin\alpha$ acts parallel to the incline

$$\sum F_X: \quad f - W\sin\alpha = 0$$

$$\sum F_Y: \quad N_R + N_F - W\cos\alpha = 0$$

$$\sum M_R: \quad (-2)(W\cos\alpha) + (0.68)W\sin\alpha + 2.82N_F = 0$$

Solving: $N_R = 5930$ N, $N_F = 10750$ N

Example Problem 8

Determine the magnitude T of the tension in the supporting cable and the magnitude of the force on the pin at A for the jib crane shown. The beam AB is a standard 0.5-m I-beam with a mass of 95 kg per meter of length.

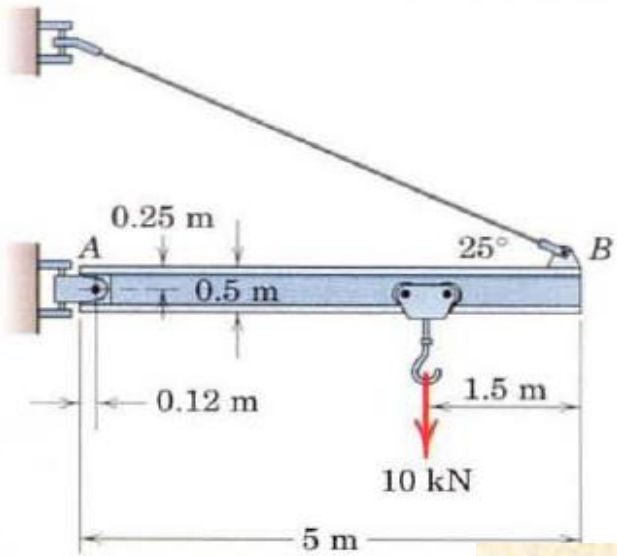

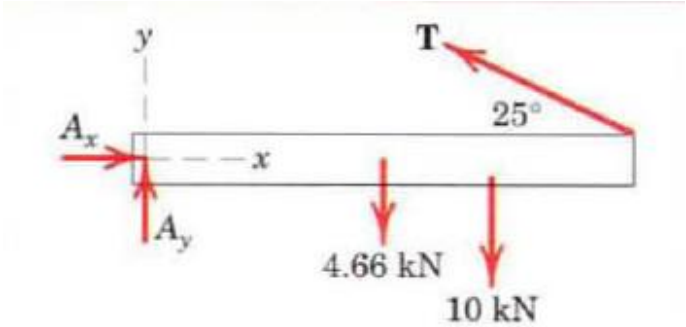

Free-body diagram

The weight of the beam is 95 $(10^3)(5)9.81$=4.66kN and acts through its center.

$[\Sigma M_A = 0]$ $\quad (T \cos 25°)0.25 + (T \sin 25°)(5 - 0.12) - 10(5 - 1.5 - 0.12) - 4.66(2.5 - 0.12) = 0$

from which $\quad T = 19.61$ kN *Ans.*

Equating the sums of forces in the x- and y-directions to zero gives

$[\Sigma F_x = 0]$ $\quad A_x - 19.61 \cos 25° = 0 \quad A_x = 17.77$ kN

$[\Sigma F_y = 0]$ $\quad A_y + 19.61 \sin 25° - 4.66 - 10 = 0 \quad A_y = 6.37$ kN

$[A = \sqrt{A_x^2 + A_y^2}]$ $\quad A = \sqrt{(17.77)^2 + (6.37)^2} = 18.88$ kN *Ans.*

Example Problem 9

The person exerts 20-N forces on the pliers. Draw free-body diagram of one part of the pliers. Notice that the pin at C connecting the two parts of the pliers behaves like a pin support. Determine the reactions at C and the force B exerted on the pliers by the bolt.

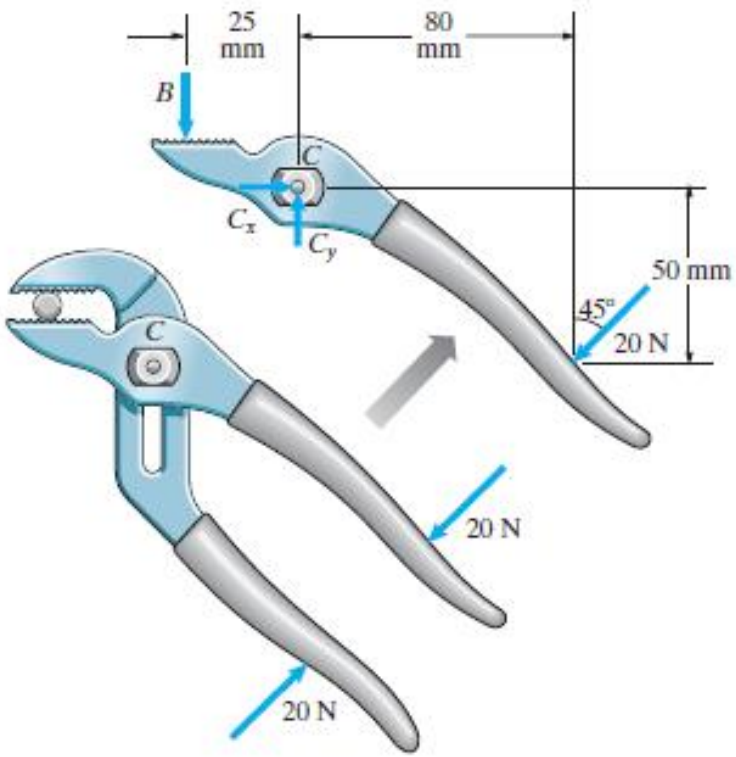

Solution: The equilibrium equations

$$\sum M_C : B(25\text{ mm}) - 20\text{ N}\ \cos 45^\circ(80\text{ mm}) - 20\text{ N}\ \sin 45^\circ(50\text{ mm}) = 0$$

$$\sum F_x : C_x - 20\text{ N}\ \sin 45^\circ = 0$$

$$\sum F_y : C_y - B - 20\text{ N}\ \cos 45^\circ = 0$$

Solving:

$$\boxed{B = 73.5\text{ N},\ C_x = 14.14\text{ N},\ C_y = 87.7\text{ N}}$$

Example Problem 10

The member ACG of the front-end loader is subjected to a load W = 2 kN and is supported by a pin support at A and the hydraulic cylinder BC. Treat the hydraulic cylinder as a two-force member.

(a) Draw a free-body diagrams of the hydraulic cylinder and the member ACG.

(b) Determine the reactions on the member ACG.

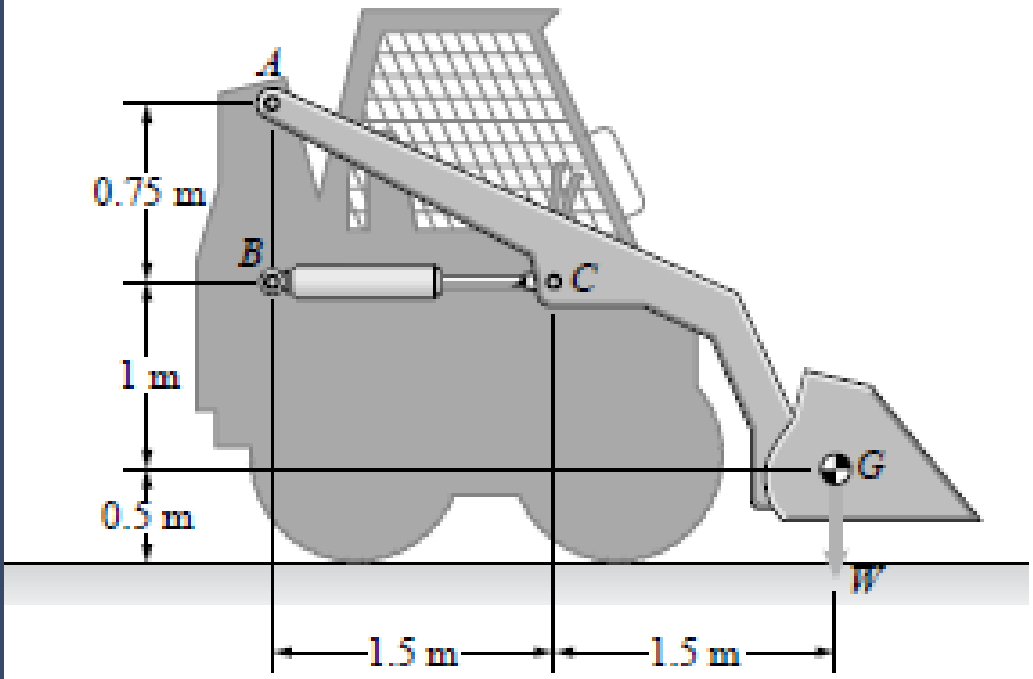

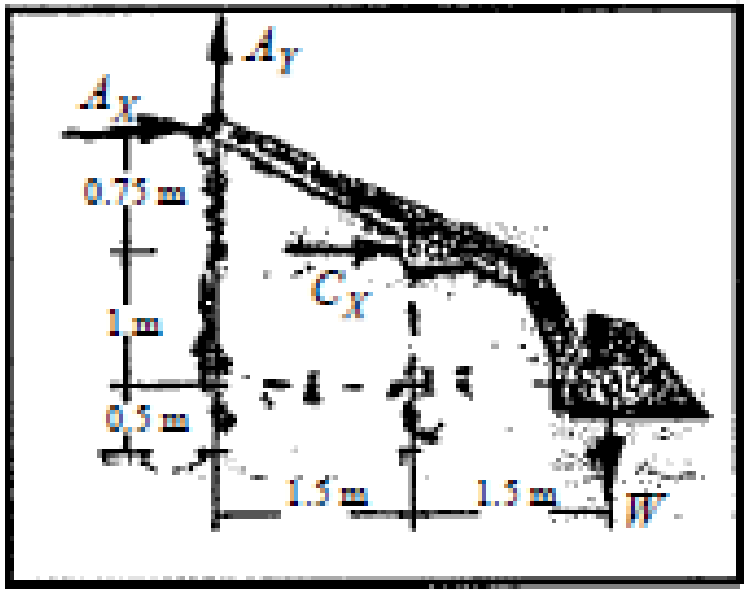

Solution: This is a very simple Problem. The free body diagrams are shown at the right. From the free body diagram of the hydraulic cylinder, we get the equation $B_X + C_X = 0$. This will enable us to find B_X once the loads on member ACG are known. From the diagram of ACG, the equilibrium equations are

$$\sum F_x = A_X + C_X = 0,$$

$$\sum F_y = A_Y - W = 0,$$

and $\sum M_A = (0.75)C_X - (3)W = 0.$

Using the given value for W and solving these equations, we get

$$A_X = -8 \text{ kN},$$

$$A_Y = 2 \text{ kN},$$

$$C_X = 8 \text{ kN},$$

and $B_X = -8$ kN.

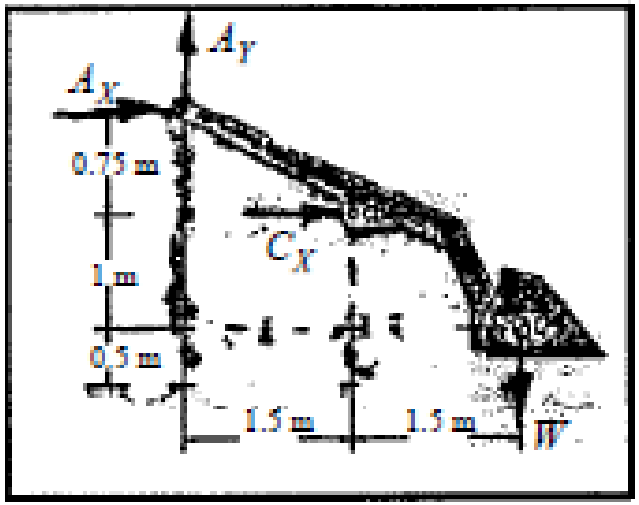

Sample Problem 4.1

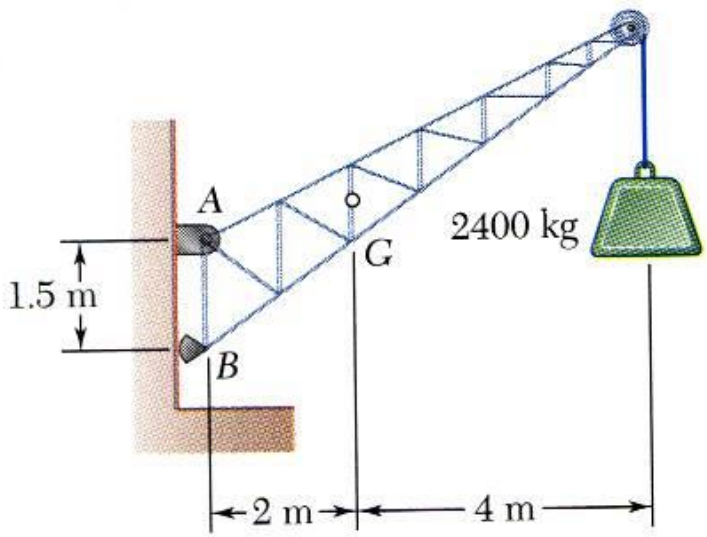

A fixed crane has a mass of 1000 kg and is used to lift a 2400 kg crate. It is held in place by a pin at *A* and a rocker at *B*. The center of gravity of the crane is located at *G*.

Determine the components of the reactions at *A* and *B*.

SOLUTION:

- Create a free-body diagram for the crane.
- Determine *B* by solving the equation for the sum of the moments of all forces about *A*. Note there will be no contribution from the unknown reactions at *A*.
- Determine the reactions at *A* by solving the equations for the sum of all horizontal force components and all vertical force components.
- Check the values obtained for the reactions by verifying that the sum of the moments about *B* of all forces is zero.

Sample Problem 4.1

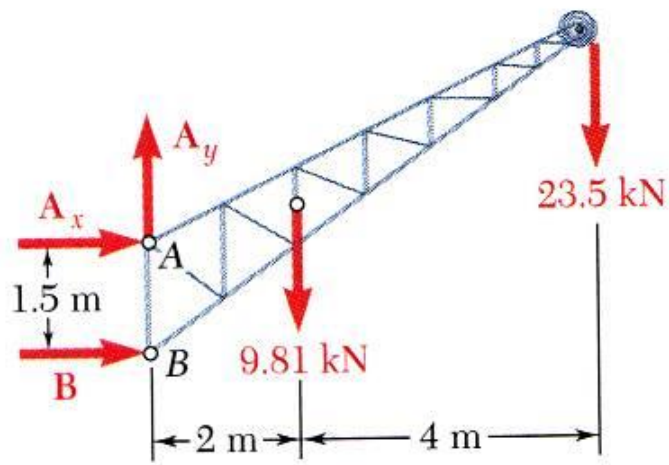

- Create the free-body diagram.

- Determine B by solving the equation for the sum of the moments of all forces about A.

$$\sum M_A = 0: \quad +B(1.5\text{m}) - 9.81\,\text{kN}(2\text{m}) - 23.5\,\text{kN}(6\text{m}) = 0$$

$$\boxed{B = +107.1\,\text{kN}}$$

- Determine the reactions at A by solving the equations for the sum of all horizontal forces and all vertical forces.

$$\sum F_x = 0: \quad A_x + B = 0$$

$$\boxed{A_x = -107.1\,\text{kN}}$$

$$\sum F_y = 0: \quad A_y - 9.81\,\text{kN} - 23.5\,\text{kN} = 0$$

$$\boxed{A_y = +33.3\,\text{kN}}$$

- Check the values obtained.

Example Problem 2

Two crates, each weighing 250 lb, are placed as shown in the bed of a 3000-lb pickup truck. Determine the reactions at each of the two (*a) rear wheels A, (b) front wheels B.*

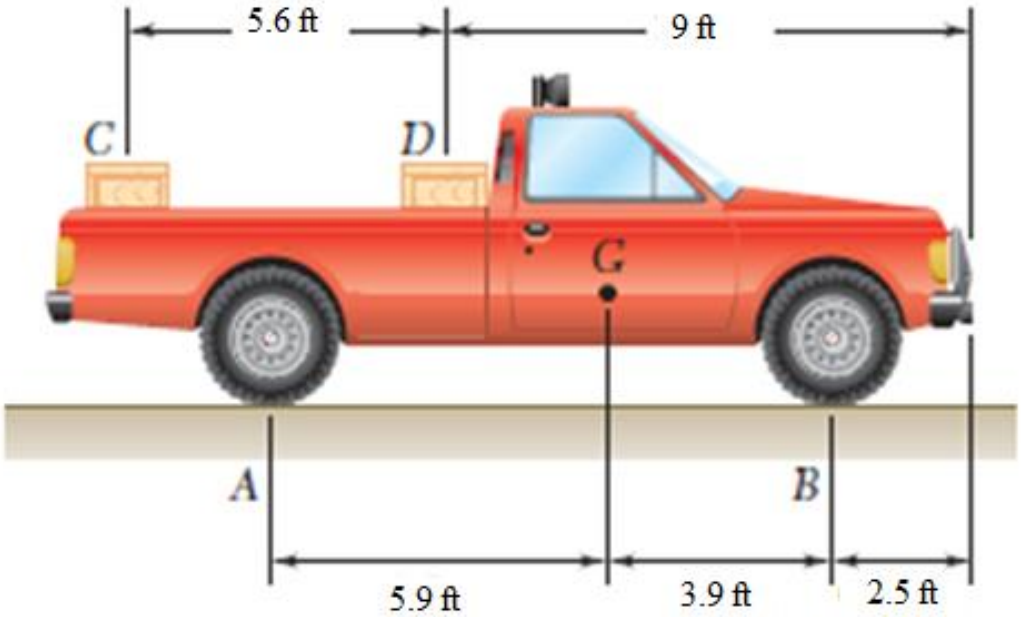

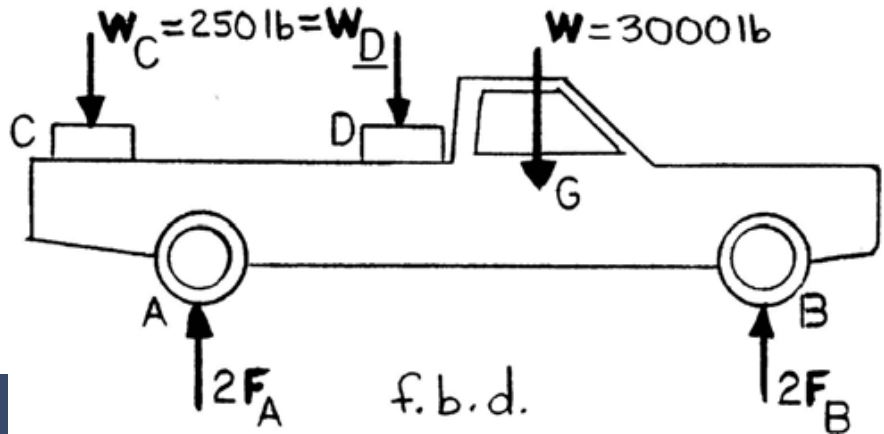

Solution

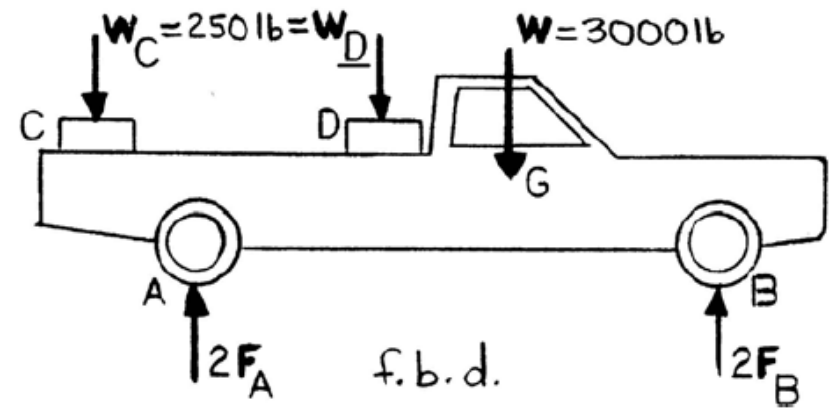

(*a*) From f.b.d. of truck

$$+\circlearrowleft \Sigma M_B = 0: \quad (250\text{ lb})(12.1\text{ ft}) + (250\text{ lb})(6.5\text{ ft}) + (3000\text{ lb})(3.9\text{ ft}) - (2F_A)(9.8\text{ ft}) = 0$$

$$\therefore\ 2F_A = \frac{16350}{9.8} = 1668.37\text{ lb}$$

$$\therefore\ \mathbf{F}_A = 834\text{ lb}\uparrow$$

(*b*) From f.b.d. of truck

$$+\circlearrowleft \Sigma M_A = 0: \quad (2F_B)(9.8\text{ ft}) - (3000\text{ lb})(5.9\text{ ft}) - (250\text{ lb})(3.3\text{ ft}) + (250\text{ lb})(2.3\text{ ft}) = 0$$

$$\therefore\ 2F_B = \frac{17950}{9.8} = 1831.63\text{ lb}$$

$$\therefore\ \mathbf{F}_B = 916\text{ lb}\uparrow$$

Check: $+\uparrow \Sigma F_y = 0: \quad (-250 + 1668.37 - 250 - 3000 + 1831.63)\text{ lb} = 0?$

$$(3500 - 3500)\text{ lb} = 0 \quad \text{ok}$$

The 158,000-kg airplane is at rest on the ground (z = 0 is ground level). The landing gear carriages are at A, B, and C. The coordinates of the point G at which the weight of the plane acts are (3, 0.5, 5) m. What are the magnitudes of the normal reactions exerted on the landing gear by the ground?

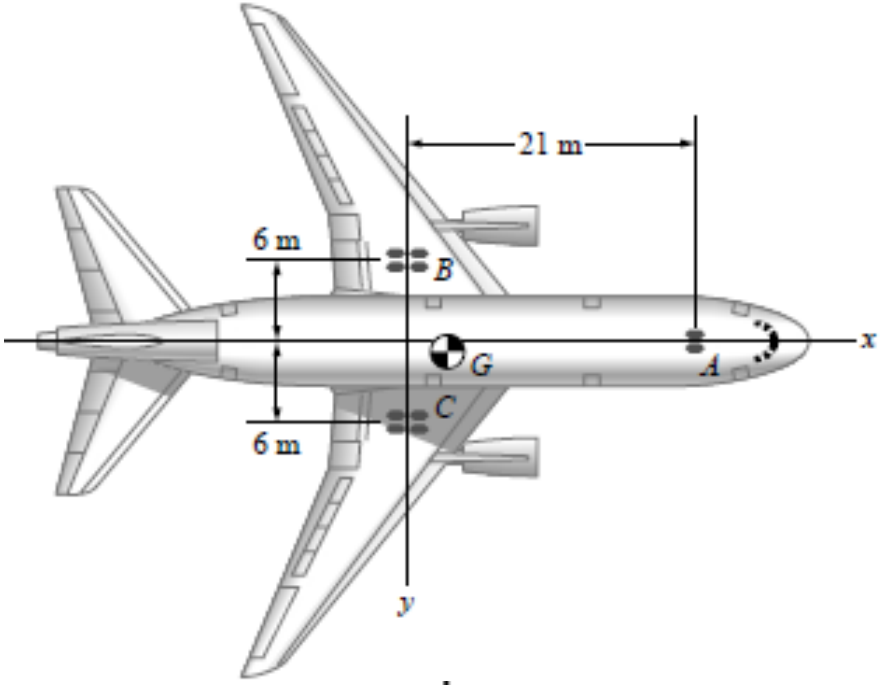

$$\sum F_Y = (N_L + N_R) + N_F - W = 0$$

$$\sum M_R = -3\ \text{mg} + 21 N_F = 0$$

Solving,

$$N_F = 221.4\ \text{kN} \quad \textbf{(1)}$$

$$(N_L + N_R) = 1328.6\ \text{kN} \quad \textbf{(2)}$$

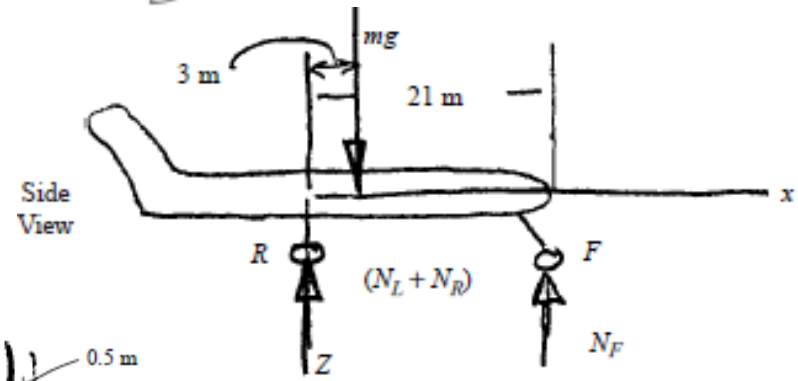

$$\circlearrowleft + \sum M_O = 0.5\ \text{W} - 6(N_R) + 6(N_L) = 0 \quad \textbf{(3)}$$

Solving (1), (2), and (3), we get

$N_F = 221.4$ kN

$N_R = 728.9$ kN

$N_L = 599.7$ kN

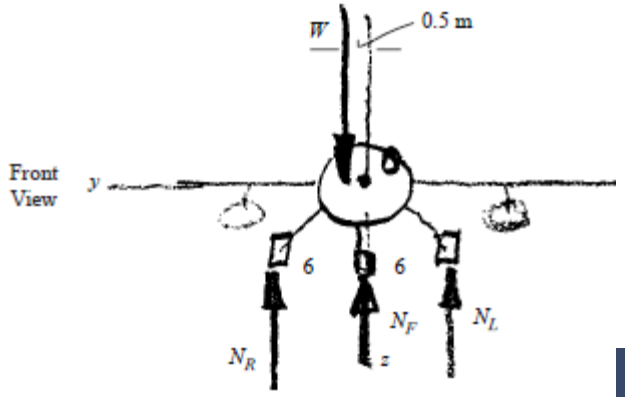

Example Problem 6

In a procedure to evaluate the strength of the triceps muscle, a person pushes down on a load cell with the palm of his hand as indicated in the figure. If the load-cell reading is 35 lb, determine the vertical tensile force F generated by the triceps muscle. The lower arm weighs 3.2 lb with mass center at G. State any assumptions.

Ans. $F = 401$ lb

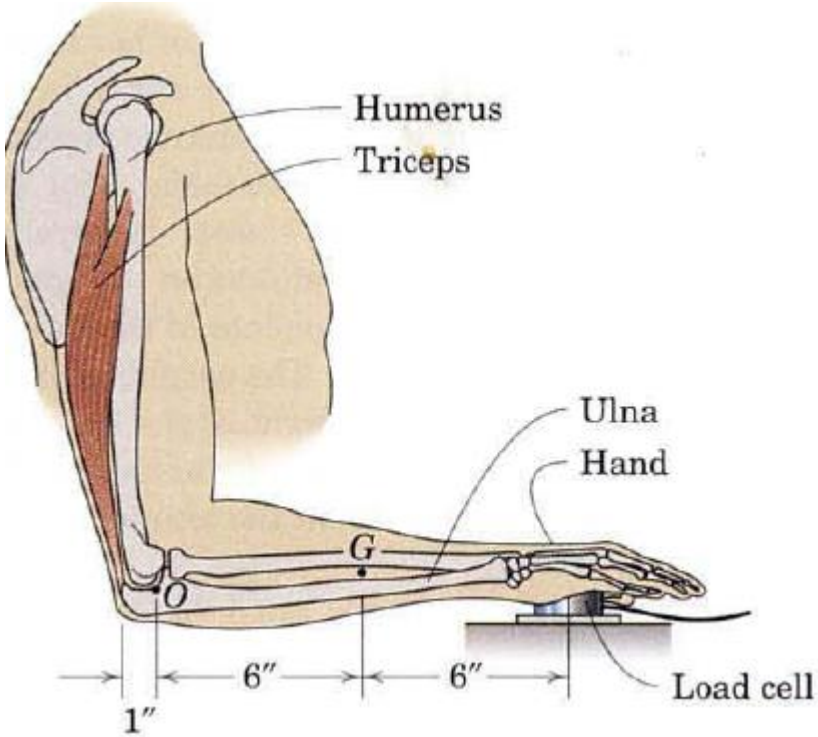

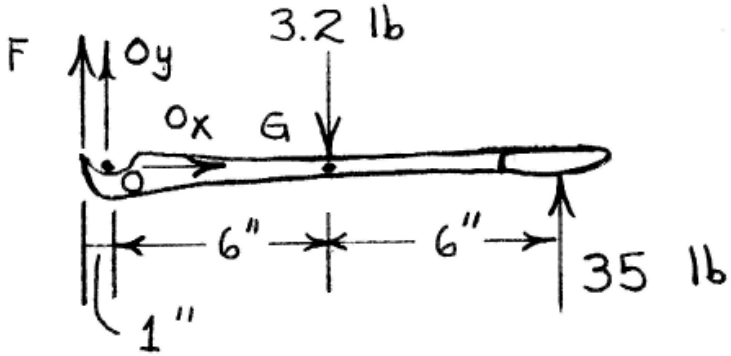

$$\circlearrowleft + \sum M_O = 0: \; -F(1) - 3.2(6) + 35(12) = 0$$

$$\underline{F = 401 \text{ lb}}$$

Problem The normal forces exerted on the car's tires by the road are

$\mathbf{N}_A = 5104\mathbf{j}$ (N),

$\mathbf{N}_B = 5027\mathbf{j}$ (N),

$\mathbf{N}_C = 3613\mathbf{j}$ (N),

$\mathbf{N}_D = 3559\mathbf{j}$ (N).

If you represent these forces by a single equivalent force $\mathbf{N}$, what is $\mathbf{N}$, and where does its line of action intersect the $x-z$ plane?

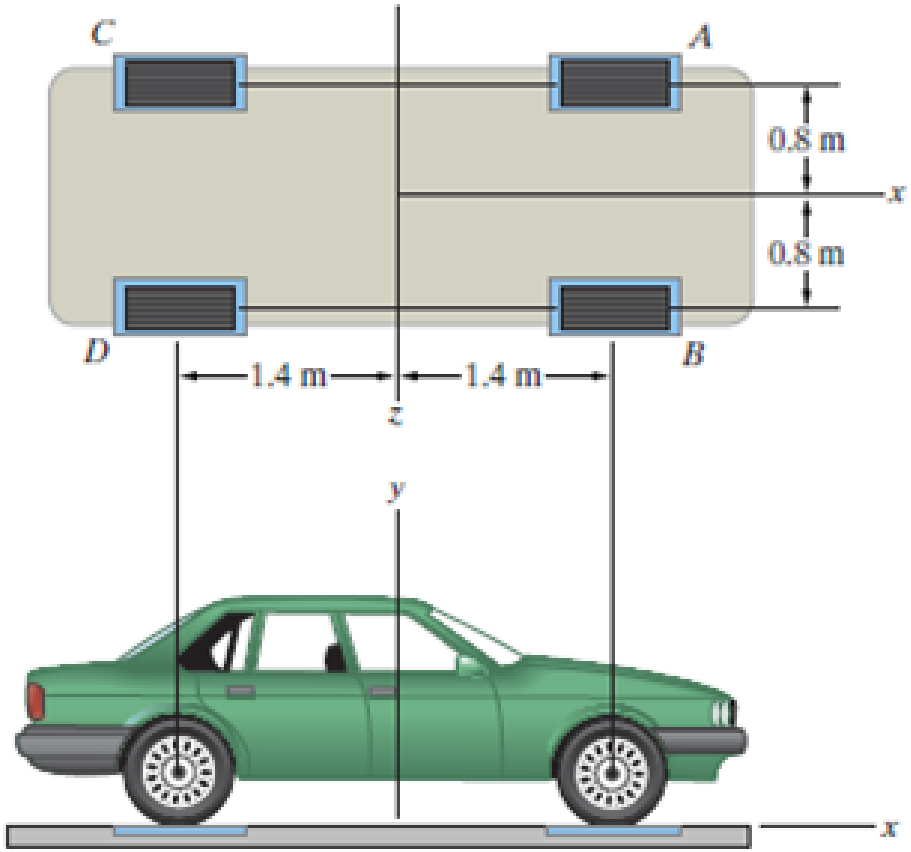

To accommodate the rise and fall of the tide, a walkway from a pier to a float is supported by two rollers as shown. If the mass center of the 300-kg walkway is at G, calculate the tension *T in the horizontal cable* which is attached to the cleat and find the force under the roller at A.

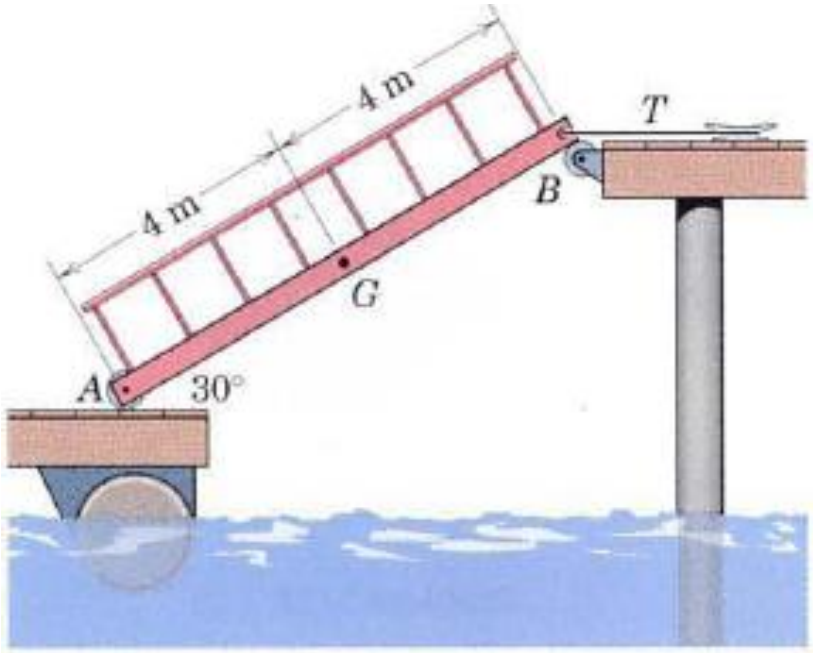

A block placed under the head of the claw hammer as shown greatly facilitates the extraction of the nail. If a 200 N pull on the handle is required to pull the nail , calculate the tension *T in the nail and the magnitude A of the force exerted by the hammer head on* the block. The cont acting surfaces at *A are sufficiently* rough to prevent slipping.

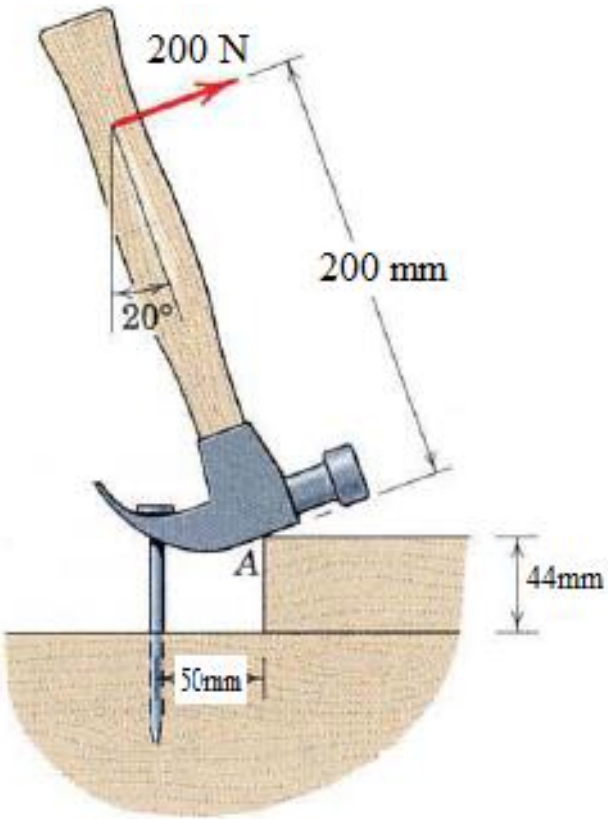

A free way sign measuring 4 m by 2 m is supported by the single mast as shown. The sign, supporting framework, and mast together weigh 300 kg. with center of gravity 3.3 m away from the vertical centerline of the mast. When the sign is subjected to the direct blast of a 75 ml/hr wind, an average pressure difference of 700 N/ m^2 is developed between the front and back sides of the sign with the resultant of the wind-pressure forces acting at the center of the sign.

Determine the magnitudes of the force and moment reactions at the base of the mast. Such results should be instrumental in the design of the base.

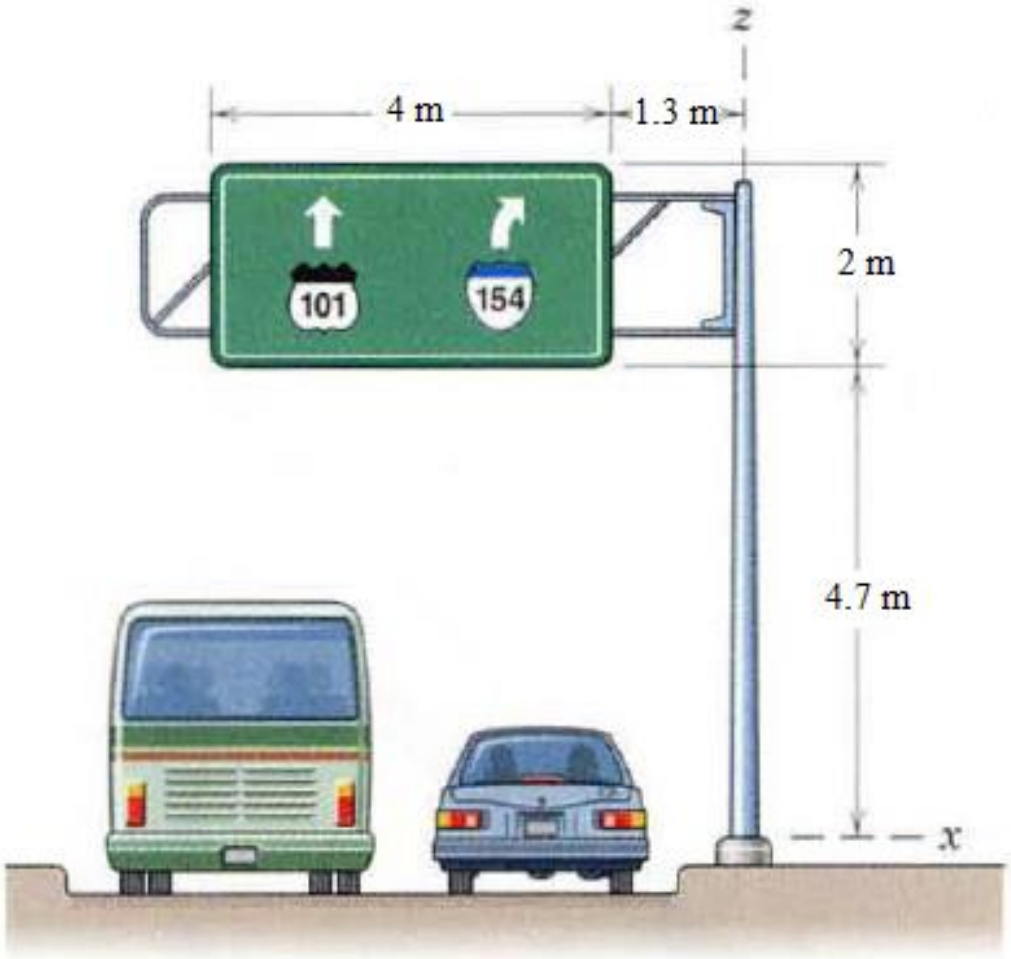

A three-legged stool is subjected to the load *L as* shown. Determine the vertical force reaction under each leg. Neglect the weight of the stool.

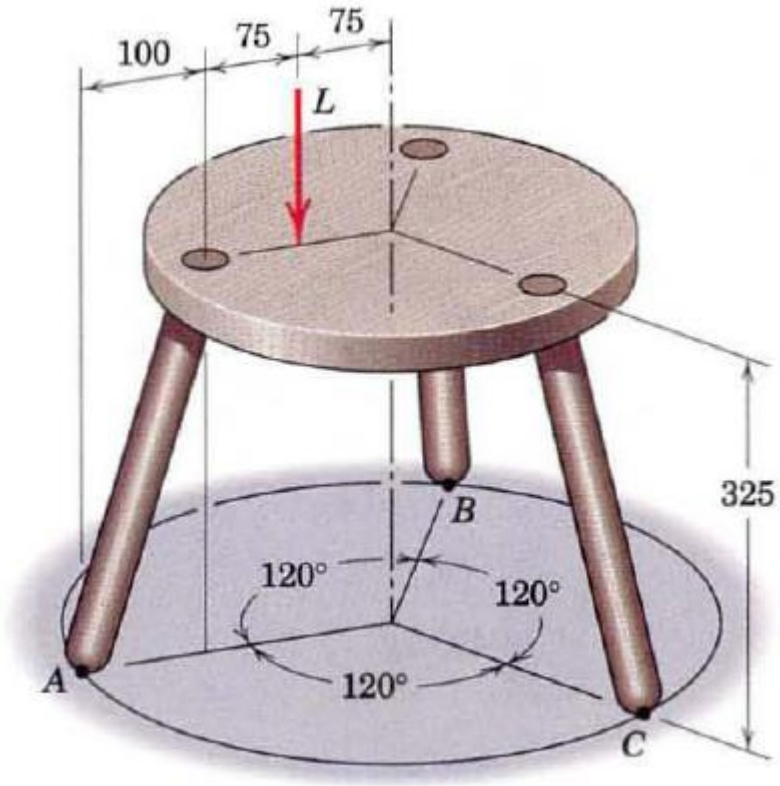

Dimensions in millimeters

Example Problem 4

Calculate the tension T in the cable which supports the 1000-lb load with the pulley arrangement shown. Each pulley is free to rotate about its bearing, and the weights of all parts are small compared with the load. Find the magnitude of the total force on the bearing of pulley C.

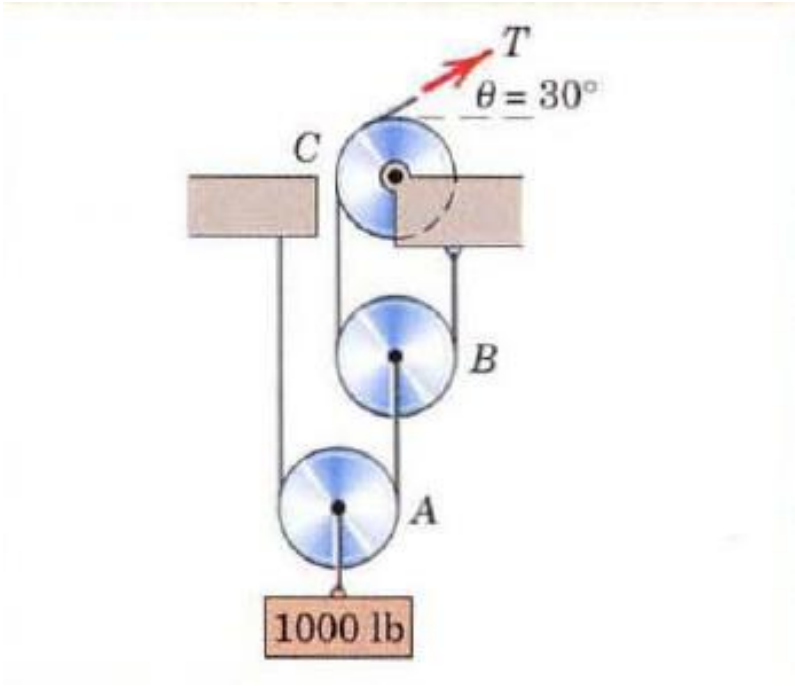

Solution

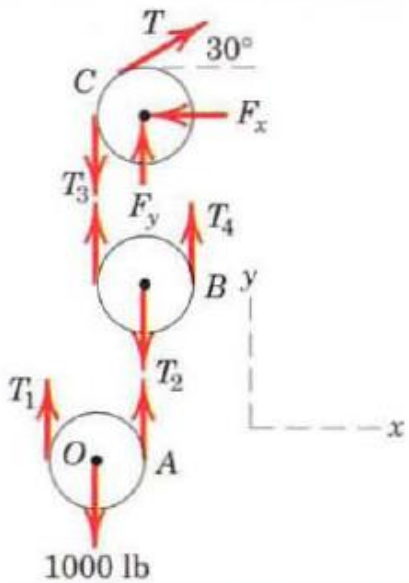

Solution. The free-body diagram of each pulley is drawn in its relative position to the others. We begin with pulley A, which includes the only known force. With the unspecified pulley radius designated by r, the equilibrium of moments about its center O and the equilibrium of forces in the vertical direction require

$[\Sigma M_O = 0]$ $\quad T_1 r - T_2 r = 0 \quad T_1 = T_2$

$[\Sigma F_y = 0]$ $\quad T_1 + T_2 - 1000 = 0 \quad 2T_1 = 1000 \quad T_1 = T_2 = 500$ lb

From the example of pulley A we may write the equilibrium of forces on pulley B by inspection as

$$T_3 = T_4 = T_2/2 = 250 \text{ lb}$$

For pulley C the angle $\theta = 30°$ in no way affects the moment of T about the center of the pulley, so that moment equilibrium requires

$$T = T_3 \quad \text{or} \quad T = 250 \text{ lb} \qquad \textit{Ans.}$$

Equilibrium of the pulley in the x- and y-directions requires

$[\Sigma F_x = 0]$ $\quad 250 \cos 30° - F_x = 0 \quad F_x = 217$ lb

$[\Sigma F_y = 0]$ $\quad F_y + 250 \sin 30° - 250 = 0 \quad F_y = 125$ lb

$[F = \sqrt{F_x^2 + F_y^2}]$ $\quad F = \sqrt{(217)^2 + (125)^2} = 250$ lb $\qquad$ *Ans.*

The three-wheel truck is used to carry the 100-kg box as shown. Calculate the changes in the normal force reactions at the three wheels due to the weight of the box.

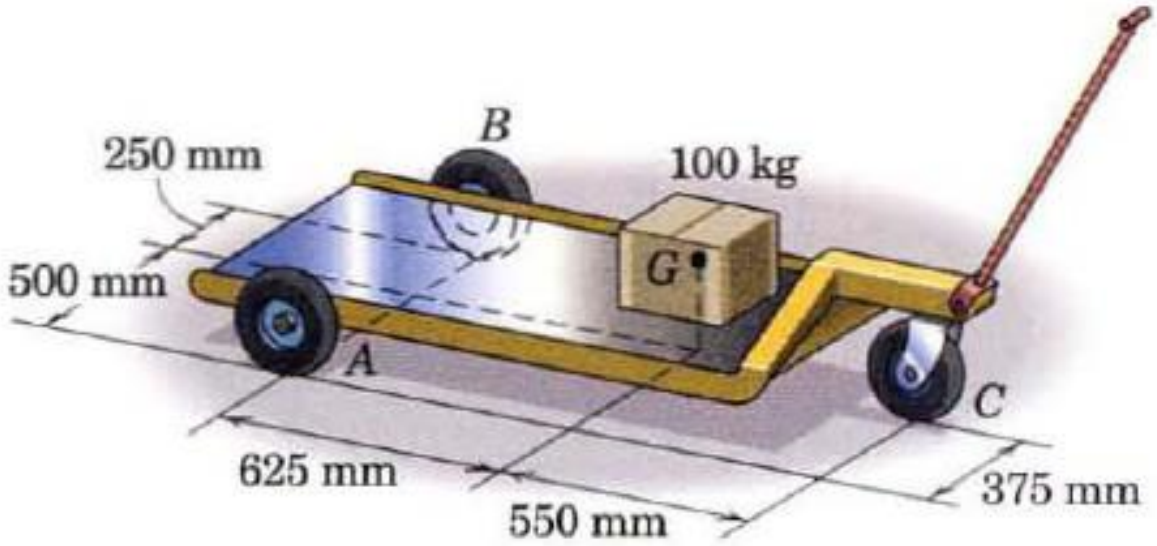

Sample Problem 4.3

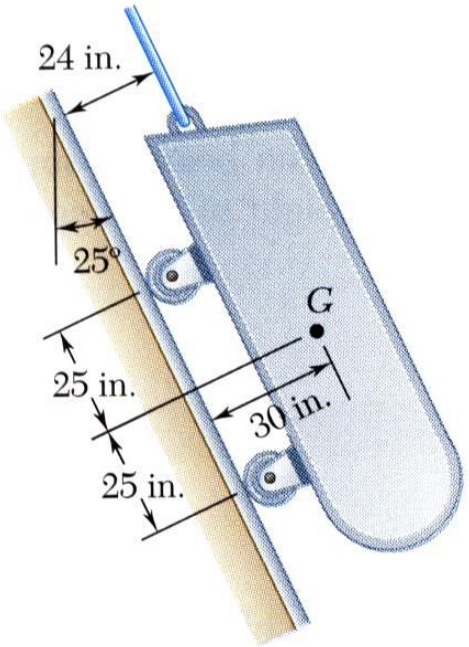

A loading car is at rest on an inclined track. The gross weight of the car and its load is 5500 lb, and it is applied at at *G*. The cart is held in position by the cable.

Determine the tension in the cable and the reaction at each pair of wheels.

SOLUTION:

- Create a free-body diagram for the car with the coordinate system aligned with the track.
- Determine the reactions at the wheels by solving equations for the sum of moments about points above each axle.
- Determine the cable tension by solving the equation for the sum of force components parallel to the track.
- Check the values obtained by verifying that the sum of force components perpendicular to the track are zero.

Sample Problem 4.3

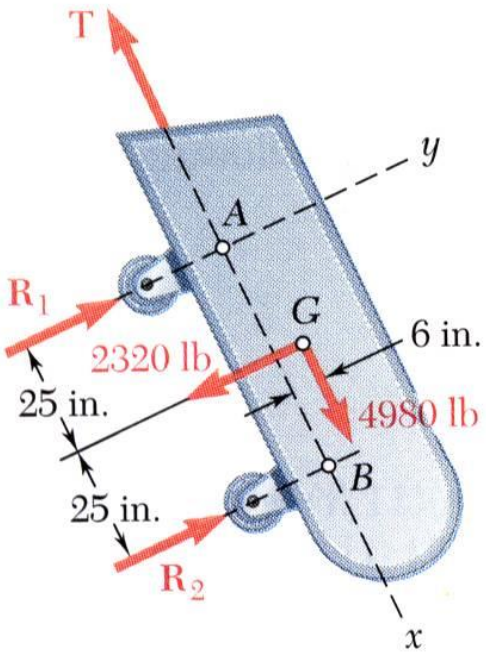

- Create a free-body diagram

$$W_x = +(5500\,\text{lb})\cos 25^\circ$$
$$= +4980\,\text{lb}$$

$$W_y = -(5500\,\text{lb})\sin 25^\circ$$
$$= -2320\,\text{lb}$$

- Determine the reactions at the wheels.

$$\sum M_A = 0: \quad -(2320\,\text{lb})25\text{in.} - (4980\,\text{lb})6\text{in.} + R_2(50\text{in.}) = 0$$

$$\boxed{R_2 = 1758\,\text{lb}}$$

$$\sum M_B = 0: \quad +(2320\,\text{lb})25\text{in.} - (4980\,\text{lb})6\text{in.} - R_1(50\text{in.}) = 0$$

$$\boxed{R_1 = 562\,\text{lb}}$$

- Determine the cable tension.

$$\sum F_x = 0: \quad +4980\,\text{lb} - \text{T} = 0$$

$$\boxed{T = +4980\,\text{lb}}$$

Sample Problem 4.4

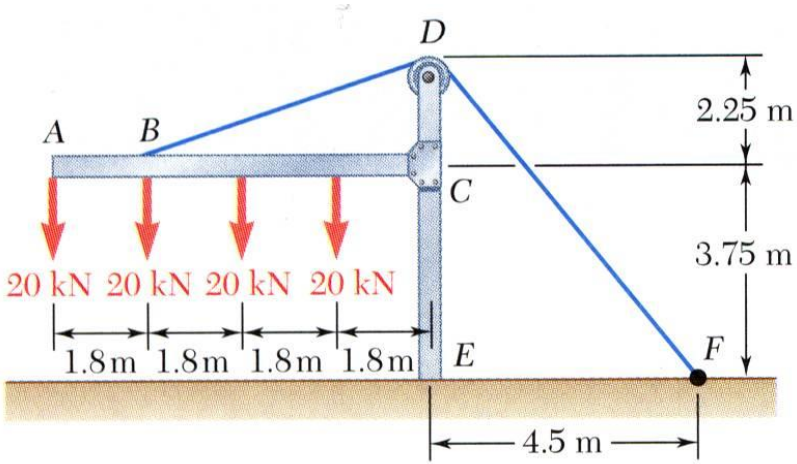

The frame supports part of the roof of a small building. The tension in the cable is 150 kN.

Determine the reaction at the fixed end *E*.

SOLUTION:

- Create a free-body diagram for the frame and cable.
- Solve 3 equilibrium equations for the reaction force components and couple at *E*.

Sample Problem 4.4

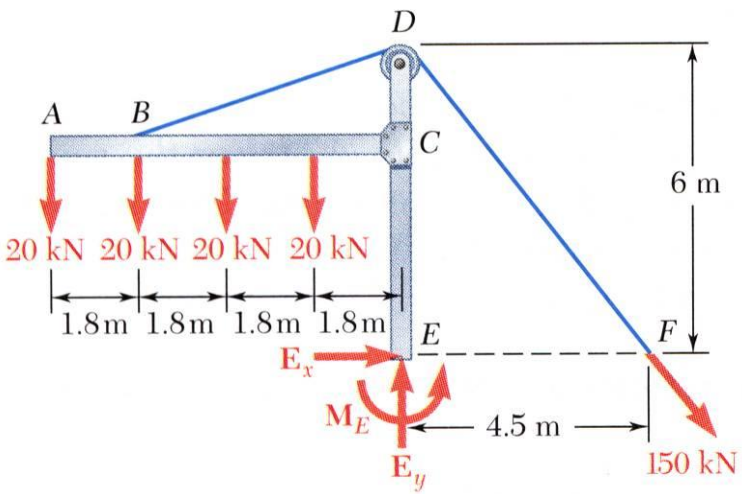

- Create a free-body diagram for the frame and cable.

- Solve 3 equilibrium equations for the reaction force components and couple.

$$\sum F_x = 0: \quad E_x + \frac{4.5}{7.5}(150\,\text{kN}) = 0$$

$$\boxed{E_x = -90.0\,\text{kN}}$$

$$\sum F_y = 0: \quad E_y - 4(20\,\text{kN}) - \frac{6}{7.5}(150\,\text{kN}) = 0$$

$$\boxed{E_y = +200\,\text{kN}}$$

$$\sum M_E = 0: \quad +20\,\text{kN}(7.2\,\text{m}) + 20\,\text{kN}(5.4\,\text{m})$$

$$+20\,\text{kN}(3.6\,\text{m}) + 20\,\text{kN}(1.8\,\text{m})$$

$$-\frac{6}{7.5}(150\,\text{kN})4.5\,\text{m} + M_E = 0$$

$$\boxed{M_E = 180.0\,\text{kN}\cdot\text{m}}$$

Equilibrium of a Two-Force Body

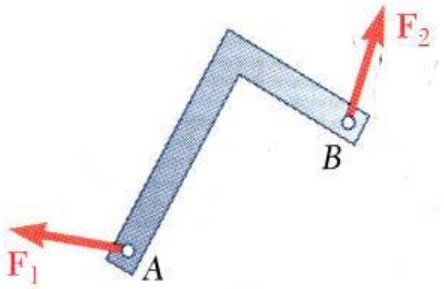

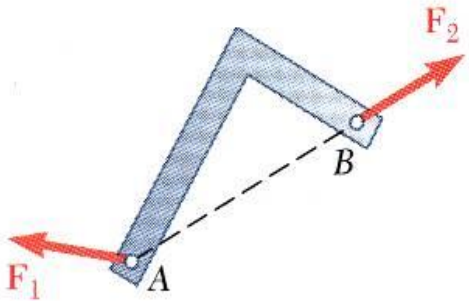

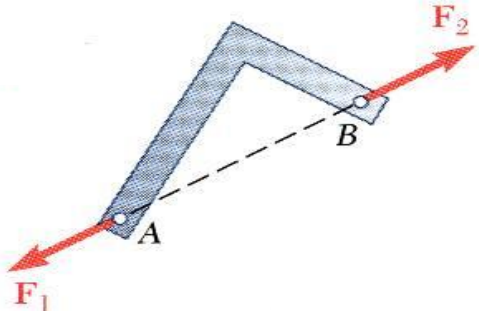

- Consider a plate subjected to two forces $\boldsymbol{F_1}$ and $\boldsymbol{F_2}$
- For static equilibrium, the sum of moments about *A* must be zero. The moment of $\boldsymbol{F_2}$ must be zero. It follows that the line of action of $\boldsymbol{F_2}$ must pass through *A*.
- Similarly, the line of action of $\boldsymbol{F_1}$ must pass through *B* for the sum of moments about *B* to be zero.
- Requiring that the sum of forces in any direction be zero leads to the conclusion that $\boldsymbol{F_1}$ and $\boldsymbol{F_2}$ must have equal magnitude but opposite sense.

Equilibrium of a Three-Force Body

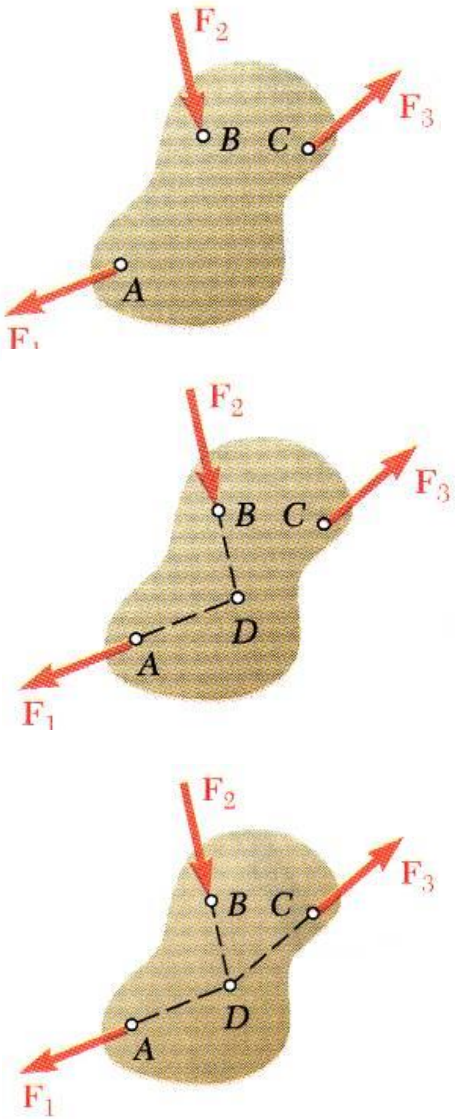

- Consider a rigid body subjected to forces acting at only 3 points.
- Assuming that their lines of action intersect, the moment of $\boldsymbol{F_1}$ and $\boldsymbol{F_2}$ about the point of intersection represented by *D* is zero.
- Since the rigid body is in equilibrium, the sum of the moments of $\boldsymbol{F_1}$, $\boldsymbol{F_2}$, and $\boldsymbol{F_3}$ about any axis must be zero. It follows that the moment of $\boldsymbol{F_3}$ about *D* must be zero as well and that the line of action of $\boldsymbol{F_3}$ must pass through *D*.
- The lines of action of the three forces must be concurrent or parallel.

Sample Problem 4.6

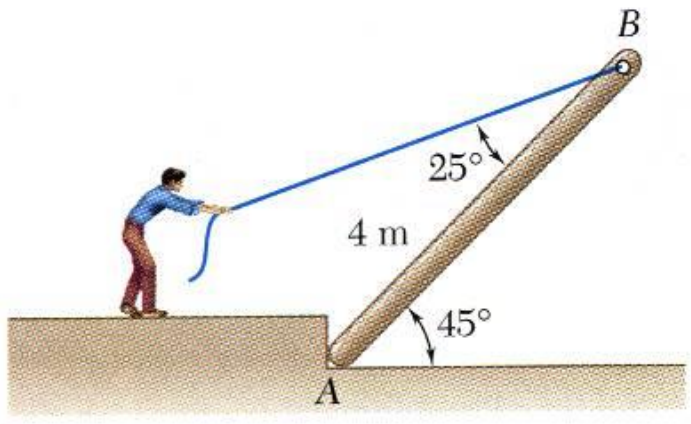

A man raises a 10 kg joist, of length 4 m, by pulling on a rope.

Find the tension in the rope and the reaction at *A*.

SOLUTION:

- Create a free-body diagram of the joist. Note that the joist is a 3 force body acted upon by the rope, its weight, and the reaction at *A*.

- The three forces must be concurrent for static equilibrium. Therefore, the reaction ***R*** must pass through the intersection of the lines of action of the weight and rope forces. Determine the direction of the reaction force ***R***.

- Utilize a force triangle to determine the magnitude of the reaction force ***R***.

Sample Problem 4.6

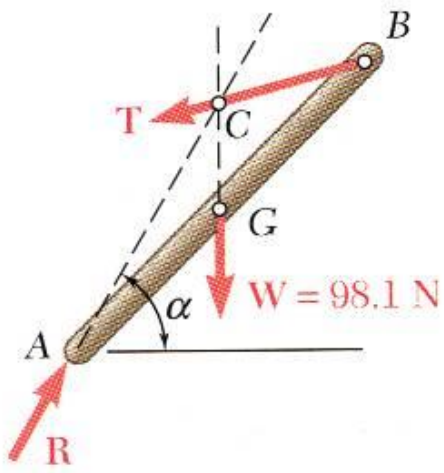

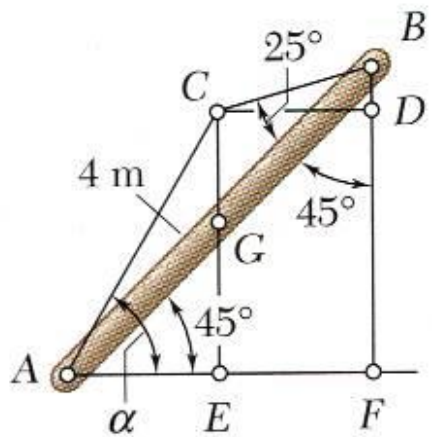

- Create a free-body diagram of the joist.
- Determine the direction of the reaction force ***R***.

$$AF = AB\cos 45 = (4\,\text{m})\cos 45 = 2.828\,\text{m}$$

$$CD = AE = \tfrac{1}{2}AF = 1.414\,\text{m}$$

$$BD = CD\cot(45+20) = (1.414\,\text{m})\tan 20 = 0.515\,\text{m}$$

$$CE = BF - BD = (2.828 - 0.515)\,\text{m} = 2.313\,\text{m}$$

$$\tan\alpha = \frac{CE}{AE} = \frac{2.313}{1.414} = 1.636$$

$$\boxed{\alpha = 58.6^\circ}$$

Sample Problem 4.6

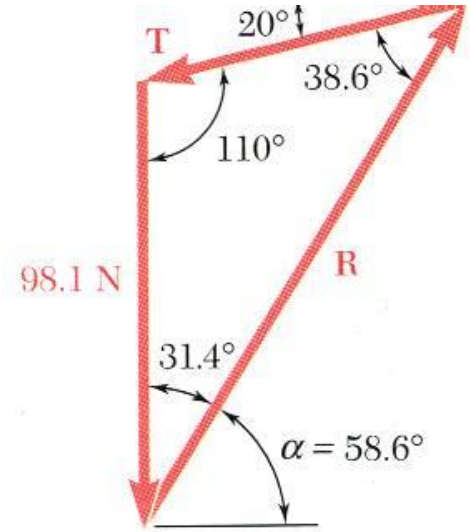

- Determine the magnitude of the reaction force ***R***.

$$\frac{T}{\sin 31.4^\circ} = \frac{R}{\sin 110^\circ} = \frac{98.1\,\text{N}}{\sin 38.6^\circ}$$

$$\boxed{\begin{aligned} T &= 81.9\,\text{N} \\ R &= 147.8\,\text{N} \end{aligned}}$$

Example Problem

To remove the lid from a 5-gallon pail, the tool shown is used to apply an upward and radially outward force to the bottom inside rim of the lid. Assuming that the top and the rim of the lid rest against the tool at *A* and *B*, respectively, and that a 60-N force is applied as indicated to the handle, determine the force acting on the rim.

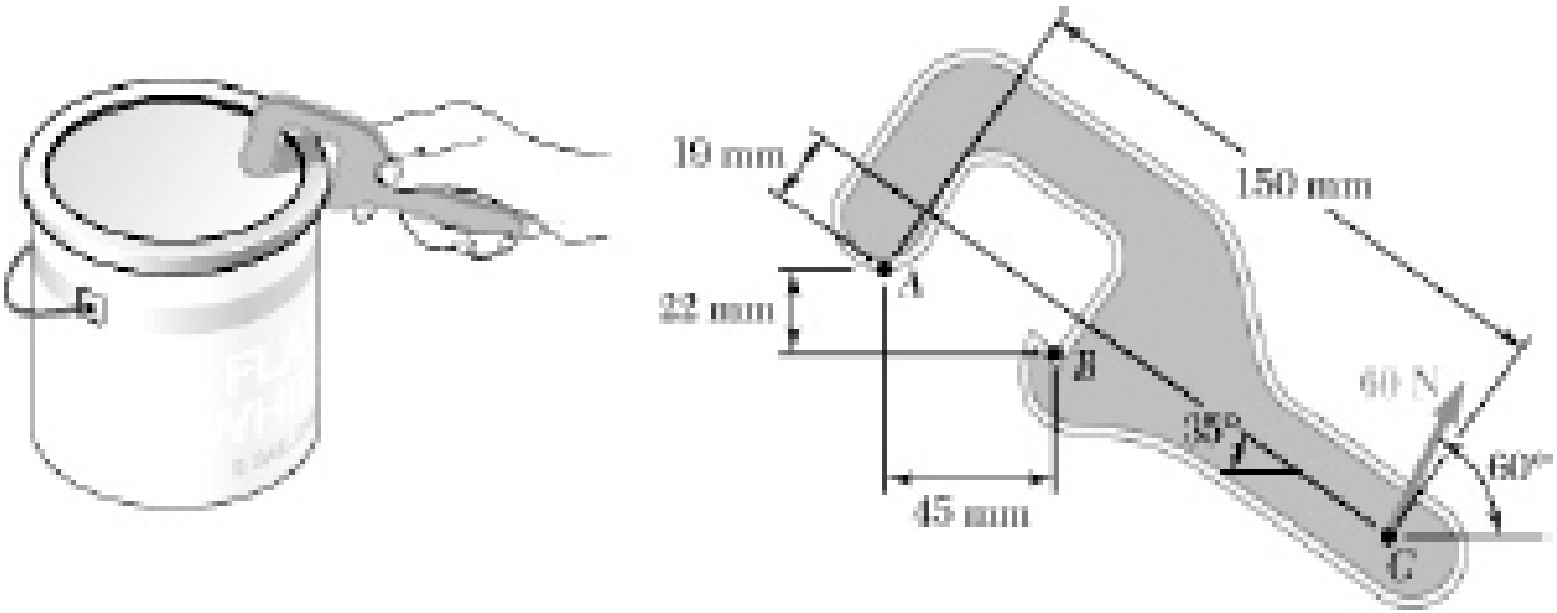

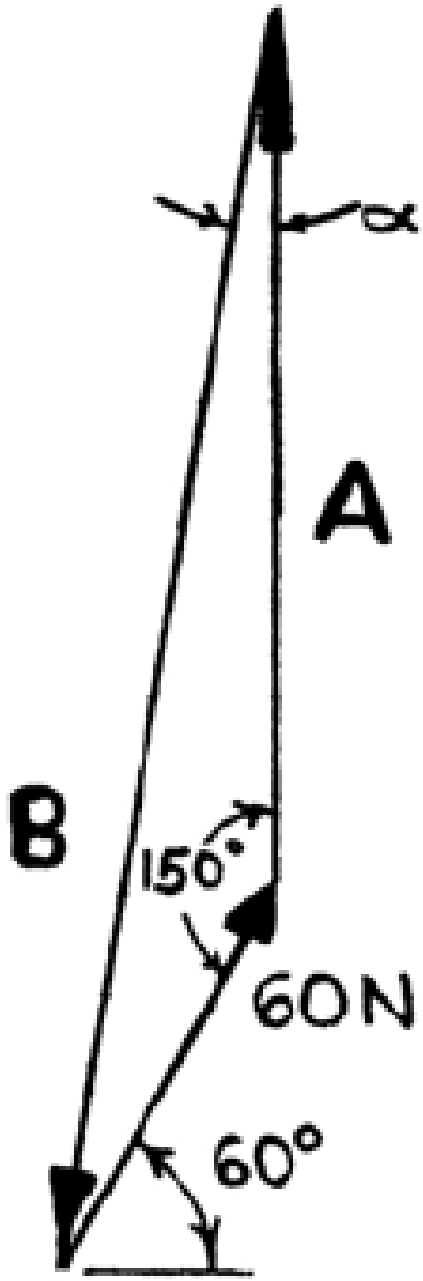
α
A
B
150°
60N
60°

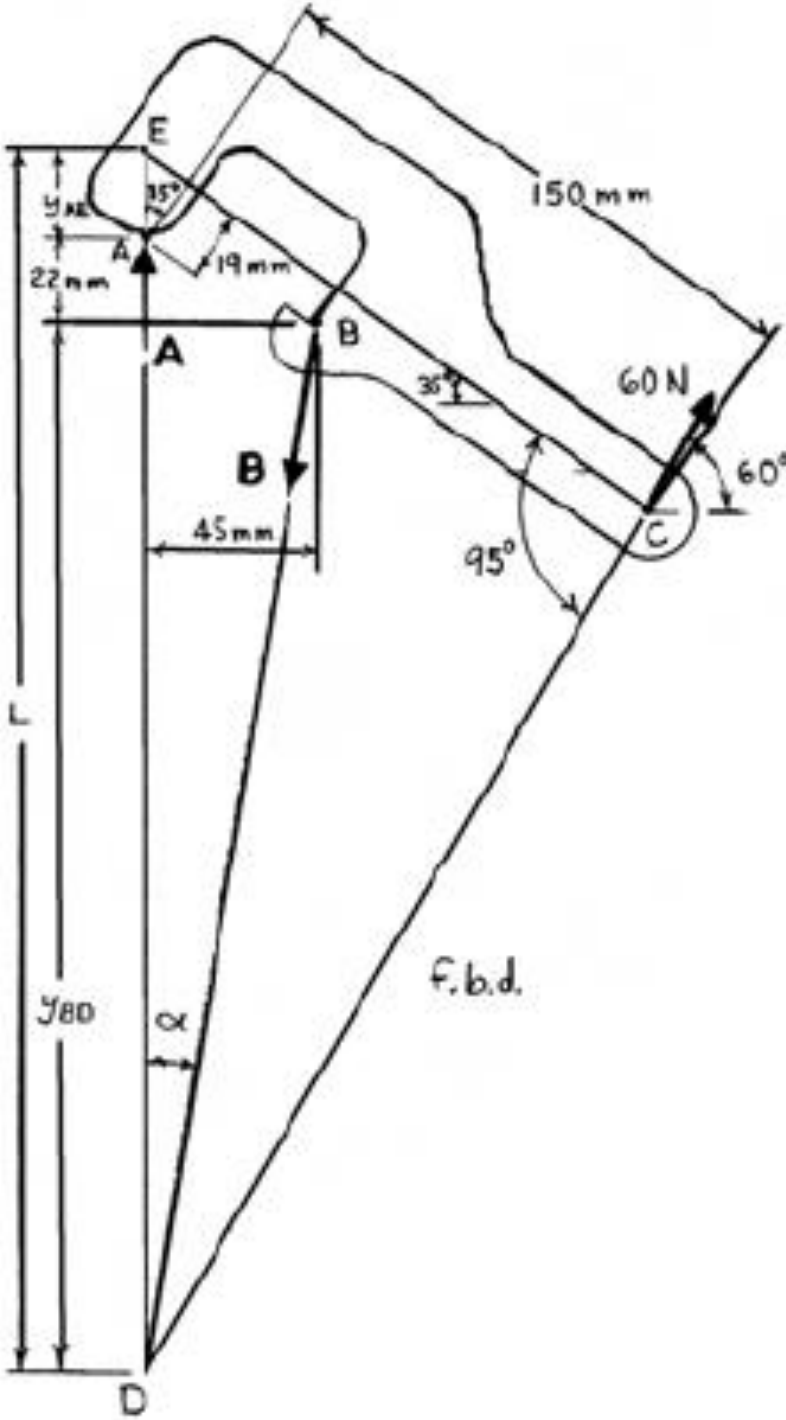
E
35°
150 mm
A
19 mm
22 mm
B
A
35°
60 N
60°
B
45 mm
95°
C
L
y80
α
F.b.d.
D

Solution

The three-force member ABC has forces that intersect at point D, where, from the law of sines (ΔCDE)

$$\frac{L}{\sin 95°} = \frac{150 \text{ mm} + (19 \text{ mm})\tan 35°}{\sin 30°}$$

$$\therefore L = 325.37 \text{ mm}$$

Then

$$\alpha = \tan^{-1}\left(\frac{45 \text{ mm}}{y_{BD}}\right)$$

where

$$y_{BD} = L - y_{AE} - 22 \text{ mm}$$

$$= 325.37 \text{ mm} - \frac{19 \text{ mm}}{\cos 35°} -$$

$$= 280.18 \text{ mm}$$

$$\therefore \alpha = \tan^{-1}\left(\frac{45 \text{ mm}}{280.18 \text{ mm}}\right) = 9.1246°$$

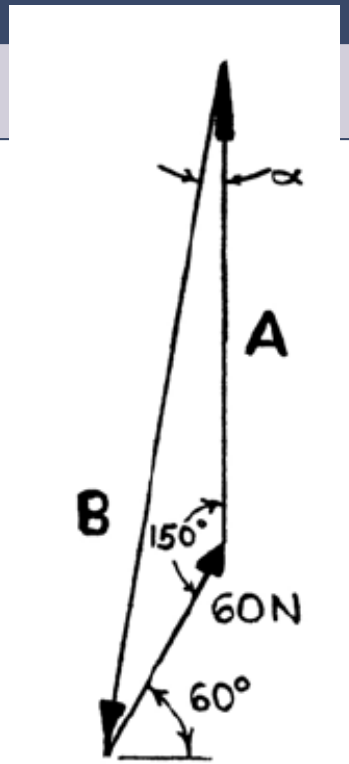

Applying the law of sines to the force triangle,

$$\frac{B}{\sin 150°} = \frac{60 \text{ N}}{\sin 9.1246°}$$

$$\therefore B = 189.177 \text{ N}$$

Or, on member $\mathbf{B} = 189.2 \text{ N} \measuredangle 80.9°$

and, on lid $\mathbf{B} = 189.2 \text{ N} \measuredangle 80.9°$

Equilibrium of a Rigid Body in Three Dimensions

- Six scalar equations are required to express the conditions for the equilibrium of a rigid body in the general three dimensional case.

$$\sum F_x = 0 \quad \sum F_y = 0 \quad \sum F_z = 0$$
$$\sum M_x = 0 \quad \sum M_y = 0 \quad \sum M_z = 0$$

- These equations can be solved for no more than 6 unknowns which generally represent reactions at supports or connections.

- The scalar equations are conveniently obtained by applying the vector forms of the conditions for equilibrium,

$$\sum \vec{F} = 0 \quad \sum \vec{M}_O = \sum \left(\vec{r} \times \vec{F}\right) = 0$$

Reactions at Supports and Connections for a Three-Dimensional Structure

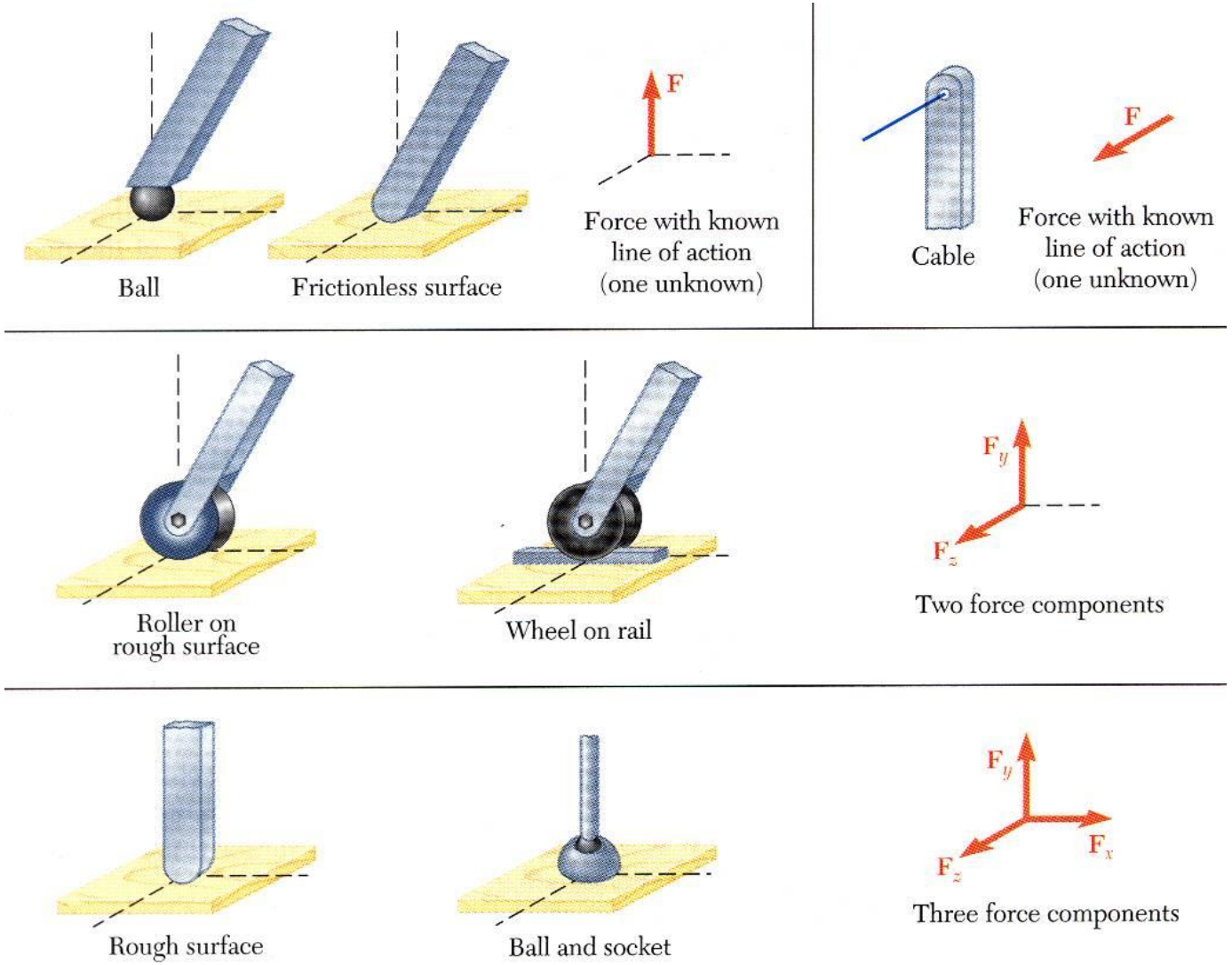

Reactions at Supports and Connections for a Three-Dimensional Structure

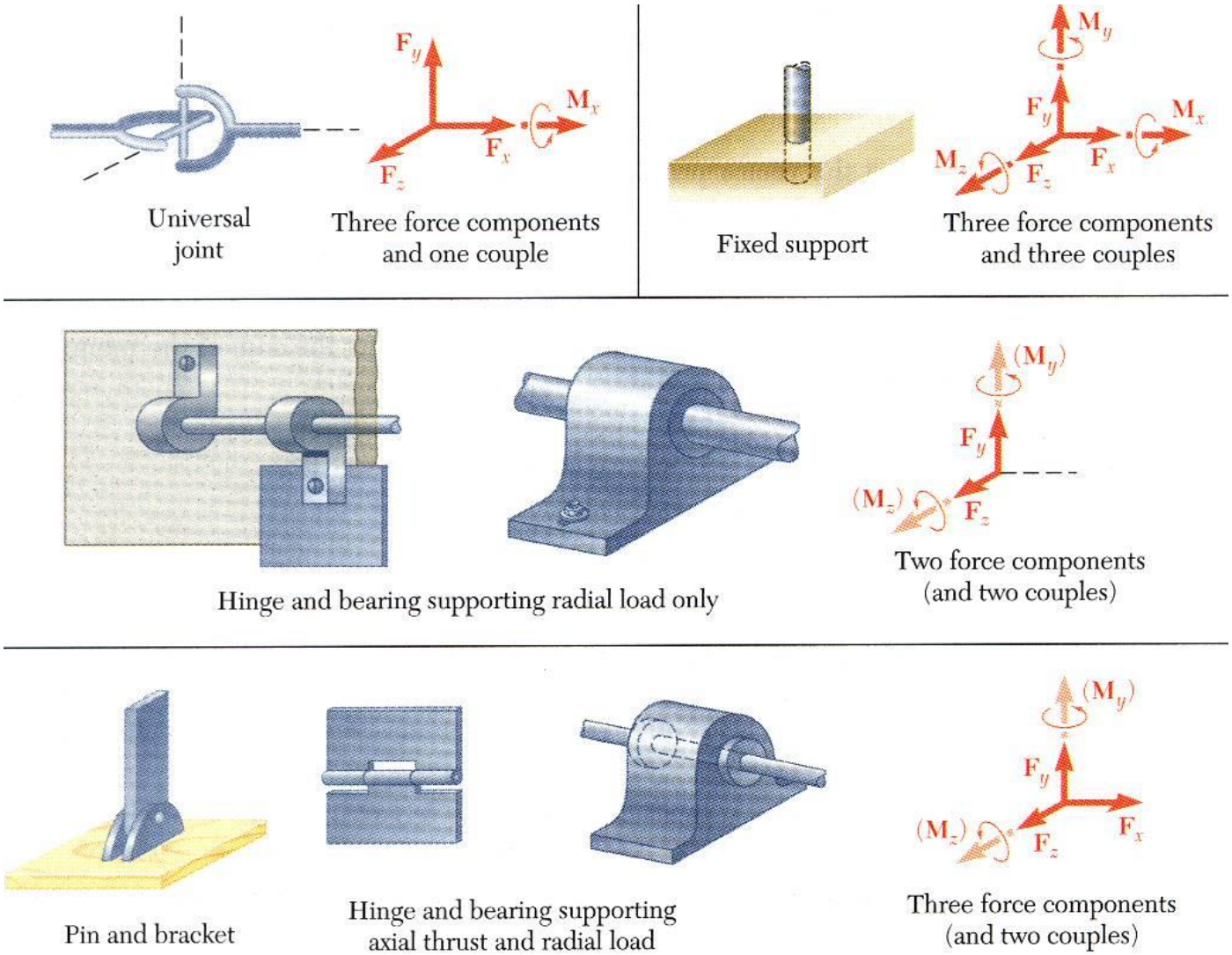

Sample Problem 4.8

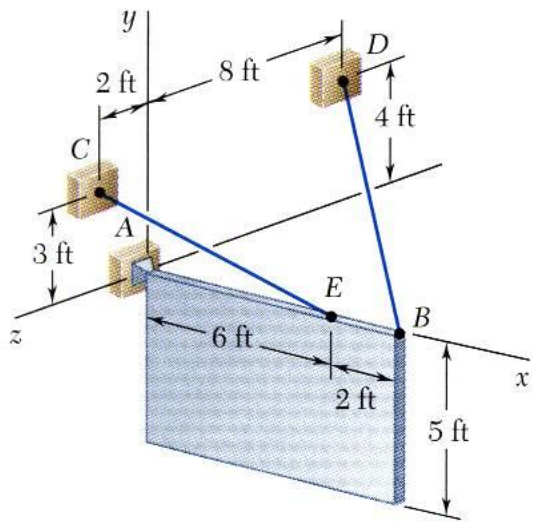

A sign of uniform density weighs 270 lb and is supported by a ball-and-socket joint at *A* and by two cables.

Determine the tension in each cable and the reaction at *A*.

SOLUTION:

- Create a free-body diagram for the sign.
- Apply the conditions for static equilibrium to develop equations for the unknown reactions.

Sample Problem 4.8

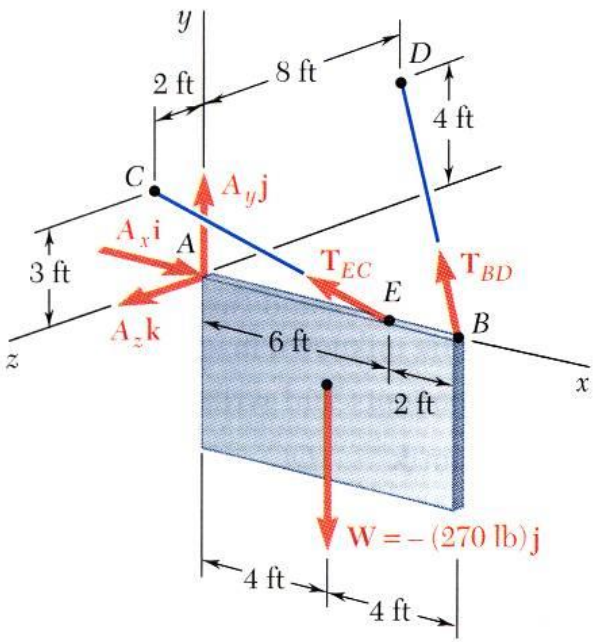

$$\vec{T}_{BD} = T_{BD}\frac{\vec{r}_D - \vec{r}_B}{|\vec{r}_D - \vec{r}_B|}$$

$$= T_{BD}\frac{-8\vec{i} + 4\vec{j} - 8\vec{k}}{12}$$

$$= T_{BD}\left(-\tfrac{2}{3}\vec{i} + \tfrac{1}{3}\vec{j} - \tfrac{2}{3}\vec{k}\right)$$

$$\vec{T}_{EC} = T_{EC}\frac{\vec{r}_C - \vec{r}_E}{|\vec{r}_C - \vec{r}_E|}$$

$$= T_{EC}\frac{-6\vec{i} + 3\vec{j} + 2\vec{k}}{7}$$

$$= T_{EC}\left(-\tfrac{6}{7}\vec{i} + \tfrac{3}{7}\vec{j} + \tfrac{2}{7}\vec{k}\right)$$

- Create a free-body diagram for the sign.

  Since there are only 5 unknowns, the sign is partially constrain. It is free to rotate about the *x* axis. It is, however, in equilibrium for the given loading.

Sample Problem 4.8

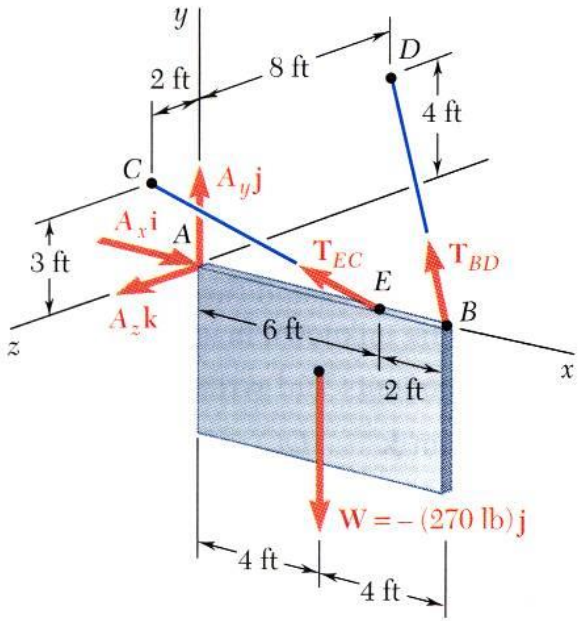

$$\sum \vec{F} = \vec{A} + \vec{T}_{BD} + \vec{T}_{EC} - (270\,\text{lb})\vec{j} = 0$$

$$\vec{i}: \quad A_x - \tfrac{2}{3}T_{BD} - \tfrac{6}{7}T_{EC} = 0$$

$$\vec{j}: \quad A_y + \tfrac{1}{3}T_{BD} + \tfrac{3}{7}T_{EC} - 270\,\text{lb} = 0$$

$$\vec{k}: \quad A_z - \tfrac{2}{3}T_{BD} + \tfrac{2}{7}T_{EC} = 0$$

$$\sum \vec{M}_A = \vec{r}_B \times \vec{T}_{BD} + \vec{r}_E \times \vec{T}_{EC} + (4\,\text{ft})\vec{i} \times (-270\,\text{lb})\vec{j} = 0$$

$$\vec{j}: \quad 5.333T_{BD} - 1.714T_{EC} = 0$$

$$\vec{k}: \quad 2.667T_{BD} + 2.571T_{EC} - 1080\,\text{lb} = 0$$

- Apply the conditions for static equilibrium to develop equations for the unknown reactions.

Solve the 5 equations for the 5 unknowns,

$$\boxed{\begin{array}{l} T_{BD} = 101.3\,\text{lb} \quad T_{EC} = 315\,\text{lb} \\ \vec{A} = (338\,\text{lb})\vec{i} + (101.2\,\text{lb})\vec{j} - (22.5\,\text{lb})\vec{k} \end{array}}$$

A person doing push-ups pauses in the position shown. His 180-lb weight W acts at the point shown. The dimensions a = 15 in, b = 42 in, and c = 16 in. Determine the normal force exerted by the floor on each of his hands and on each of his feet.

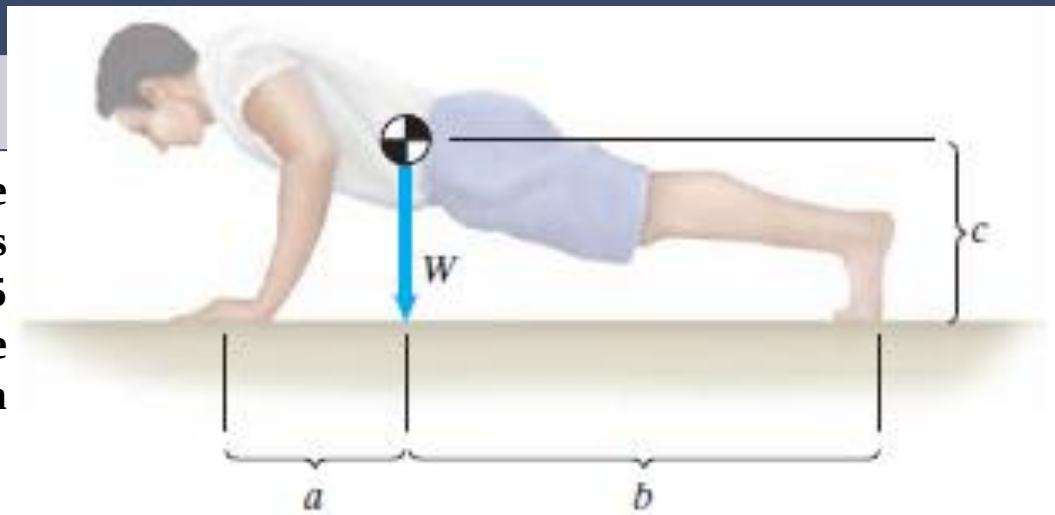

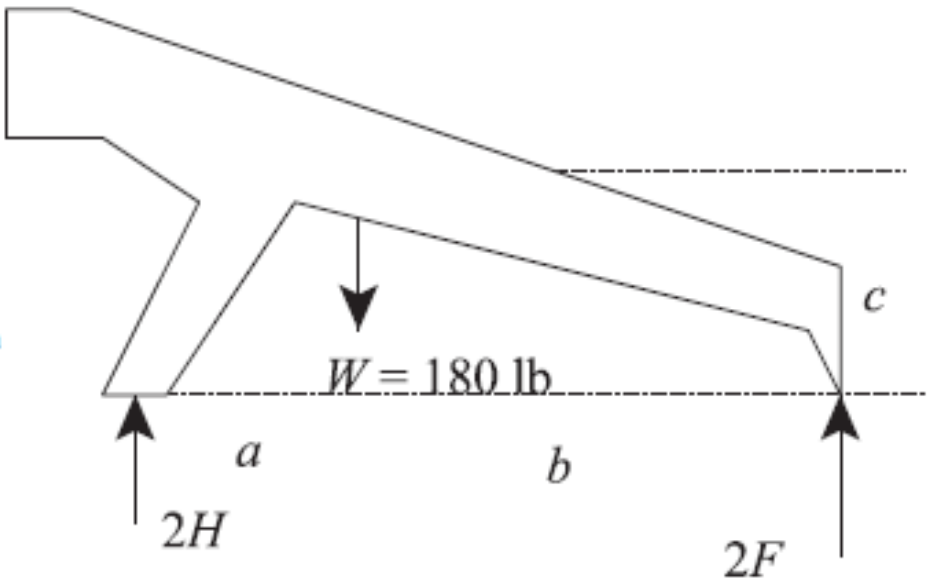

Solution: The free-body diagram is shown. The equilibrium equations are

$$\Sigma F_y : 2H + 2F - 180 \text{ lb} = 0$$

$$\Sigma M_H : -Wa + 2F(a+b)\ 0$$

We find that

$$H = 66.3 \text{ lb}, F = 23.7 \text{ lb}$$

Thus

$$\boxed{\begin{array}{l} 66.3 \text{ lb on each hand} \\ 23.7 \text{ lb on each foot} \end{array}}$$

Problem of a diving board

Two children are standing on a diving board that weighs 146 lb. Knowing that the weights of the children at C and D are 63 lb and 90 lb, respectively, determine (a) the reaction at A, (b) the reaction at B.

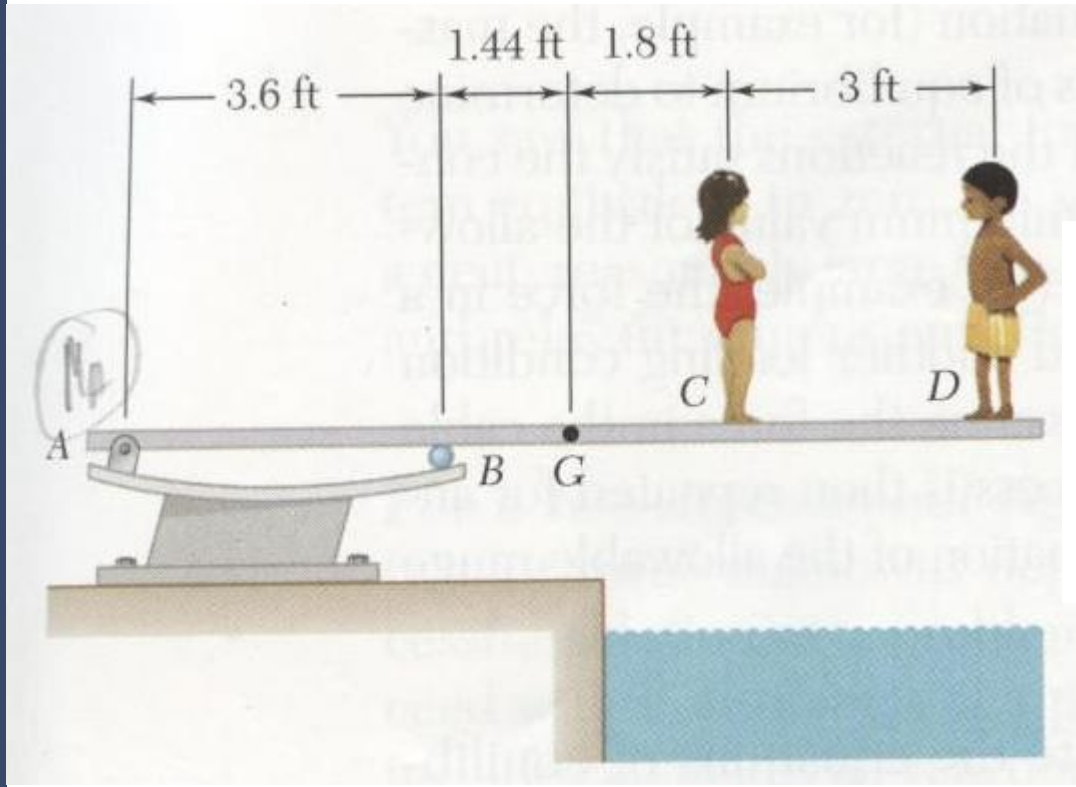

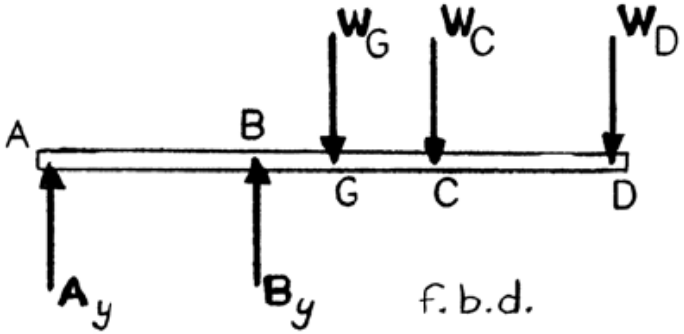

Solution

$$W_G = m_G g = (65\text{ kg})(9.81\text{ m/s}^2) = 637.65\text{ N}$$

$$W_C = m_C g = (28\text{ kg})(9.81\text{ m/s}^2) = 274.68\text{ N}$$

$$W_D = m_D g = (40\text{ kg})(9.81\text{ m/s}^2) = 392.4\text{ N}$$

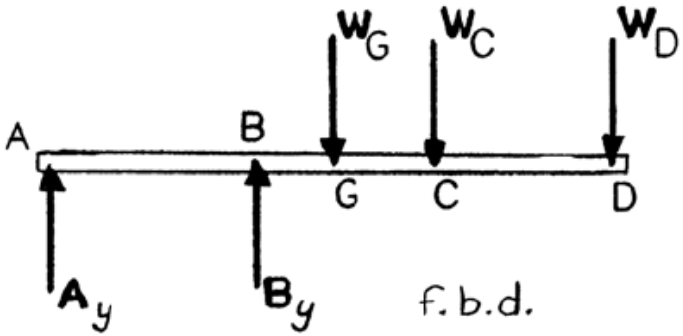

(*a*) From f.b.d. of diving board

$$+\circlearrowleft \Sigma M_B = 0: \quad -A_y(1.2\text{ m}) - (637.65\text{ N})(0.48\text{ m}) - (274.68\text{ N})(1.08\text{ m}) - (392.4\text{ N})(2.08\text{ m}) = 0$$

$$\therefore\ A_y = -\frac{1418.92}{1.2} = -1182.43\text{ N} \qquad \text{or}\ \ \mathbf{A}_y = 1.182\text{ kN}\downarrow$$

(*b*) From f.b.d. of diving board

$$+\circlearrowleft \Sigma M_A = 0: \quad B_y(1.2\text{ m}) - 637.65\text{ N}(1.68\text{ m}) - 274.68\text{ N}(2.28\text{ m}) - 392.4\text{ N}(3.28\text{ m}) = 0$$

$$\therefore\ B_y = \frac{2984.6}{1.2} = 2487.2\text{ N} \qquad \text{or}\ \ \mathbf{B}_y = 2.49\text{ kN}\uparrow$$

Check: $+\uparrow \Sigma F_y = 0: \quad (-1182.43 + 2487.2 - 637.65 - 274.68 - 392.4)\text{N} = 0?$

$$(2487.2 - 2487.2)\text{ N} = 0 \quad \text{ok}$$